**Model: 9120A, 9121A, 9122A, 9123A, 9124, 9150, 9151, 9152, 9153**

# Single Output Programmable DC Power Supply

## USER MANUAL

# Safety information

Please review the following safety precautions before operating our equipment.

## General information

The following safety precautions should be observed before using this product and any associated instrumentations.

This product is intended for use by qualified personnel who recognize shock hazards and are familiar with the safety precautions required to avoid possible injury. Read and follow all installation, operation, and maintenance information carefully before using the product. Refer to this manual for complete product specifications.
If the product is used in a manner not specified, the protection provided by the product may be impaired.

Before performing any maintenance, disconnect the line cord and all test cables.

## Protection from electric shock

Operators of this instrument must be protected from electric shock at all times. The responsible body must ensure that operators are prevented access and/or insulated from every connection point. In some cases, connections must be exposed to potential human contact.
Under these circumstances personnel must be trained to protect themselves from the risk of electric shock. If the circuit is capable of operating at or above 1000 volts, no conductive part of the circuit may be exposed.

## Definition of users

Responsible body is the individual or group responsible for the use and maintenance of equipment is operated within its specifications and operating limits, and for ensuring that operators are adequately trained.
This product should only be used as intended. Users must be trained in electrical safety procedures and proper use of the instrument. Users must be protected from electric shock and contact with hazardous live circuits.
Service is only to be performed by qualified service personnel.

## Safety symbols and terms

Connect to safety earth ground using the wire recommended in the user manual.

This symbol on an instrument indicates that the user should refer to the operating instructions located in the manual.

## Certification

We certify that this product met its published specifications at time of shipment from the factory.

# TABLE OF CONTENTS


**1. Introduction ..... 4**
Description ..... 4
Features ..... 4
**2. Quick Reference ..... 5**
2.1 The Front Panel ..... 5
**2.2 The Rear Panel** ..... 6
2.3 Preliminary Checkout ..... 7
1. Check the list of supplied items ..... 7
2. Connect the power cord and turn on the power supply ..... 7
3. Checkout Procedure ..... 7
1.4 Output Verification ..... 8
Voltage Output Check ..... 8
Current Output Check ..... 9
1.5 If the power supply does not turn On ..... 9
1.5.1 Fuse Replacement ..... 9
1.6 Adjusting the Carrying Handle ..... 10
1.7 Rack Mounting the Instrument ..... 11
**3. Front-panel Operation ..... 12**
3.1 Front Panel Keys ..... 12
Numerical Keys/Secondary Shift Functions ..... 13
Shift Functions ..... 13
Primary Function Keys ..... 13
Up/Down and Entry key ..... 13
3.2 Front-panel Operation Overview ..... 14
3.3 Setting the Voltage ..... 14
3.4 Setting the Current ..... 14
3.5 Save and Recall Operation ..... 14
3.6 Menu Operation ..... 15
3.6.1 Menu Description ..... 15
3.6.2 Menu Function ..... 17
3.7 Output Operation ..... 22
3.8 Remote Sense and digital port functions ..... 22
3.9 Digital Volt Meter (DVM) ..... 23
3.10 Milliohm Meter ..... 24
**4. Remote Operation ..... 25**
4.1 Serial adapter cables ..... 25
4.2 Communication between Power Supply and PC ..... 26
4.3 SCPI Command Overview ..... 28
Common IEEE488.2 Commands ..... 28
Essential SCPI Commands ..... 28
Port Configuration Commands ..... 30
Trigger Command ..... 30
SCPI Condition Register ..... 30
4.4 SCPI Command Description ..... 32
Common IEEE488.2 Commands ..... 32
Essential SCPI Commands ..... 34
Output Commands ..... 37
List File Commands ..... 38
Interface Configuration Commands ..... 42
Trigger commands ..... 43
Calibration commands ..... **Error! Bookmark not defined.**
**5. Specifications ..... 45**
5.1 Specifications ..... 45
5.2 Supplemental Characteristics ..... 47

# 1. Introduction

## Description

Models 9120A, 9121A, 9122A, 9123A, 9124, 9150, 9151, 9152, and 9153 are fully programmable, linear DC Power Supplies that provide you with clean and reliable power, high resolution and accuracy combined with fast transient response times and excellent temperature stability. The front panel keys and the control knob provide a convenient interface for adjusting Voltage and Current, storing and recalling operating states or enabling/disabling the output. This power supply is suitable for either bench or rack mounted operation. The 912xA is a compact, laboratory grade power supply well suited for applications in design, production or use in university labs.

## Features

- Very high accuracy and resolution: 0.1 mV, 0.1 mA
- Low ripple and low noise
- Fast settling time of <150 μs
- $5\frac{1}{2}$ digit digital voltage meter and mΩ meter
- Convenient data entry via knob or numerical key pad
- Over Temperature (OTP) protection
- Bright and easy to read display (VFD technology)
- Excellent temperature stability
- Output on/off control
- SCPI compatible command set. Communicate via USB, RS232 or GPIB (model 9123A only) interface
- Application Software for front panel emulation and simple test sequence generation
- Rack mount kit available
- Closed case calibration
- Remote Sense Function
- Discrete Fault Indicator/Remote Inhibit (DFI/RI). Can be used to turn off power supplies simultaneously. (DFI available for models 9120A, 9121A, 9122A, 9123A, 9124 only)
- List Mode: Generate, store and execute test sequences without the need for an external computer

# 2. Quick Reference

## 2.1 The Front Panel

**For Models**: 9120A, 9121A, 9122A, 9123A, 9124

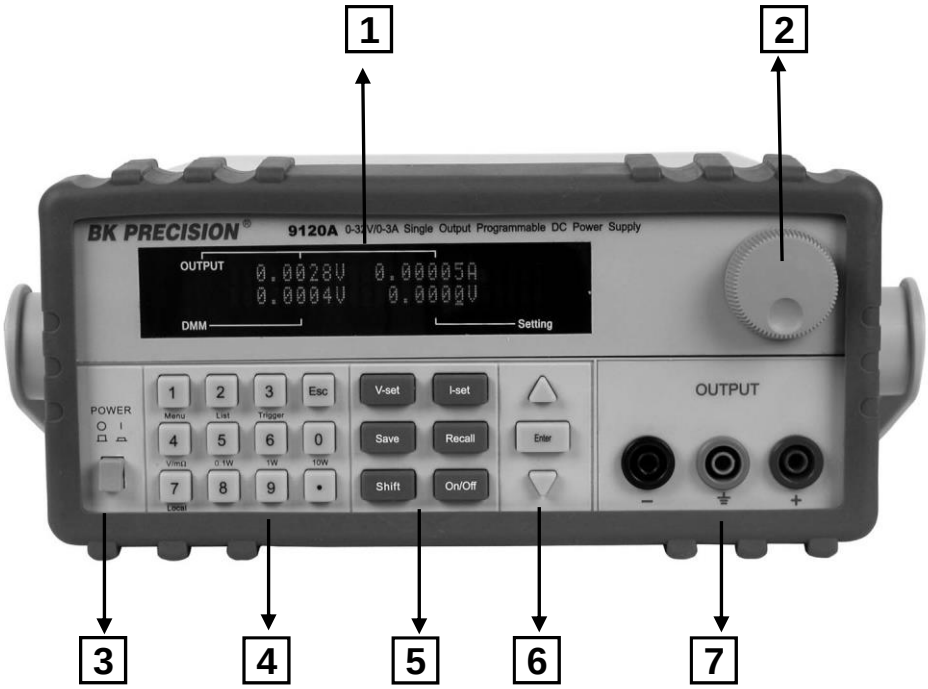


**For Models**: 9150, 9151, 9152, 9153

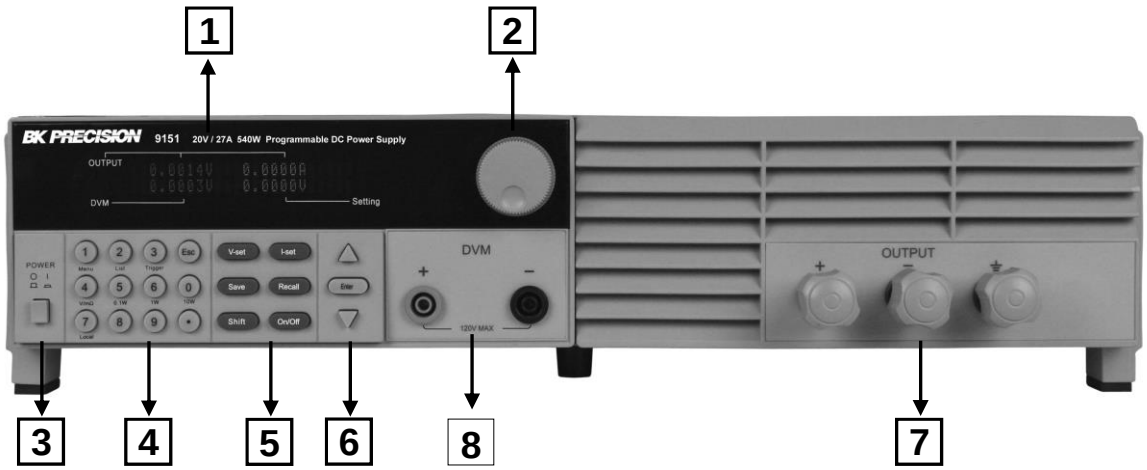


| | |
|---|---|
| 1 | VFD display |
| 2 | Rotary knob |
| 3 | Power switch |
| 4 | Numeric keys, auxiliary. functions |

| | |
|---|---|
| 5 | Function keys |
| 6 | Up/Down keys and “Enter” key |
| 7 | Output terminals |
| 8 | Digital Voltmeter terminals (For Model 9150, 9151, 9152, 9153) |

## 2.2 The Rear Panel

**For Models**: 9120A, 9121A, 9122A, 9123A, 9124

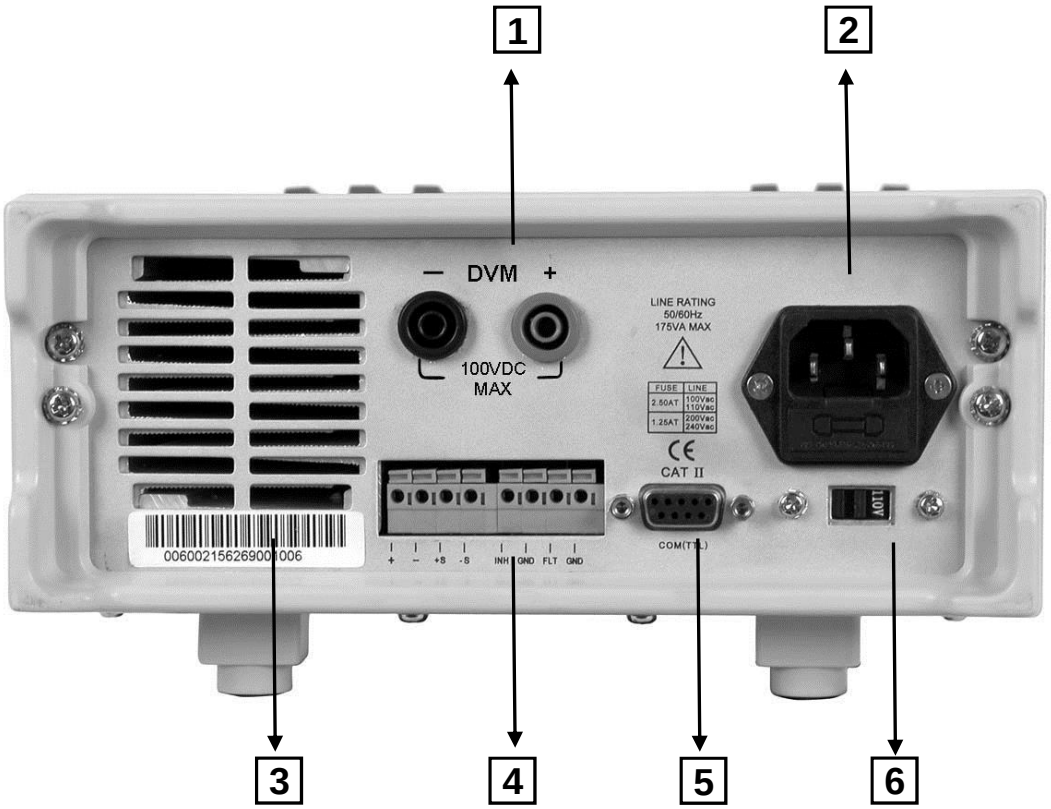


**For Models**: 9150, 9151, 9152, 9153

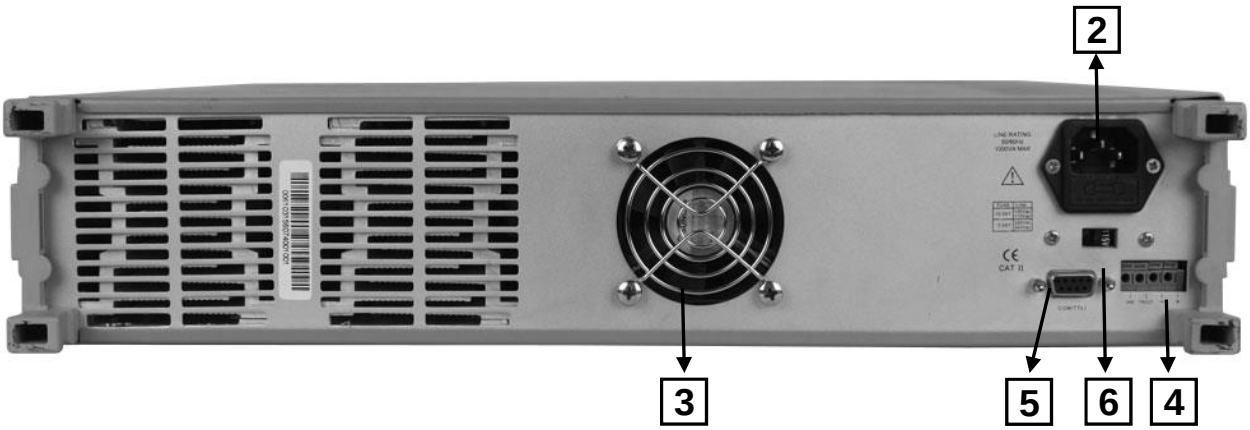

| | |
|---|---|
| 1 | Digital Voltmeter terminals. (For models 9150, 9151, 9152, and 9153, these terminals are in the front panel) |
| 2 | AC power inlet and fuse compartment |
| 3 | Ventilation holes |
| 4 | Quick connect terminal for Remote sensing and digital port functions (digital I/O, DFI/RI and ext. trigger) |
| 5 | TTL interface connector for remote control |
| 6 | AC Power selection switch (110 V / 220 V) |

## 2.3 Preliminary Checkout

The following steps help you verify that the power supply is ready for use.

### 1. Check the list of supplied items

Verify that you have received the following items with your power supply. If anything is missing, contact your authorized B&K Precision distributor.

- Power cord
- Instruction manual
- Calibration Report
- Communication cable(s)
- Software Installation disk

### 2. Connect the power cord and turn on the power supply

When you turn on the power supply, the front-panel display will light up briefly while the power supply performs its power-on self-test. All the VFD annunciators will turn on at once. Check for any missing display segments. Refer to section 1.5 in this chapter if the power supply does not turn on.

### 3. Checkout Procedure

At power up, the instrument will automatically perform a self test routine. During this time, the following should be displayed:

```
System Test, Please wait!
▮▮▮
```

followed by

```
0.000V   0.0000A
0.000V    0.000V
```

The first row displays the actual output voltage value and current and the state of power supply. The second row displays the voltage measured by the DVM (on left) and the Set Value for the voltage of the power supply.

To obtain additional information about the instrument, press and hold the SHIFT button during Power Up. On the display you will see the following:

First row: V/A rating and DVM voltage range

second row: Firmware version and serial number

```
Sourc: XXV XA Meas: XXV
Ver: 1.67 SN:5975002002
```

Press "Esc" to exit the display.

**In case the self test routine is not successful, you may see one of the following:**

If the EEPROM was damaged or the latest operation data is lost, the VFD will display:

```
ERR EEPROM
```

If the calibration data stored in the EEPROM is lost, the VFD will display

```
ERROR CAL
```

If the latest operating state of the power supply in EEPROM is lost, the VFD will display:

```
Error Config Data
```

---

**Warning:** The power supply is shipped from the factory with a power-line cord that has a plug appropriate for your location. Your power supply is equipped with a 3-wire grounding type power cord; the third conductor being the ground. The power supply is grounded only when the power-line cord is plugged into an appropriate receptacle. Do not operate your power supply without adequate cabinet ground connection.

---

## 1.4 Output Verification

The following procedures verify that the power supply outputs the correct voltage and current levels and properly responds to entries from the front panel.

### Voltage Output Check

The following steps verify basic voltage functions without load.

1) Turn on the power supply.

2) Enable the outputs

Press the Out on/off key. Notice the CV annunciator turning on.

3) Set the voltage value

Set a different voltage value. Make sure that the set value and output value are the same. Also check if the output current value is zero or close to zero A.

4) Ensure that the voltage can be adjusted from zero to the maximum rated value.

### Current Output Check

The following steps check the basic current functionality by shorting the power supply's output.

1) Turn on the power supply.
2) Disable the output by pressing the Out on/off. The ON annunciator is turned off.
3) Connect a short across the (+) and (-) output terminals with an insulated test lead. Use a wire size sufficient to handle the maximum current.
4) Enable the output.
5) Adjust the voltage value to 1.0 volt. Ensure that the CC annunciator is lit (power supply is in CC operation mode)
6) Adjust the current value. Set a different Current value and check if the actual Current value is the same as the set Current value. Also verify that the output voltage value is nearly zero.
7) Ensure that the current can be adjusted from zero to the full rated value.
8) Turn off the power supply and remove the short wire from the output terminals.

## 1.5 If the power supply does not turn On

Use the following steps to help resolve problems you might encounter when turning on the instrument.

1. Verify that there is AC power applied to the power supply.

Verify that the power cord is firmly plugged into the power receptacle on the rear panel of the power supply. Make sure the power outlet you are using is working properly and verify that the power supply is turned on.

2. Verify the power-line voltage setting.

Make sure the voltage selector switch is set according to the present line voltage (110 VAC or 220 VAC). Change the voltage setting if it's not correct.

3. Verify that the correct power-line fuse is installed.

### 1.5.1 Fuse Replacement

| Model | Fuse Description (110 VAC) | Fuse Description (220 VAC) |
|---|---|---|
| 9120A | T2.5A 250V | T1.25A 250V |
| 9121A | T2.5A 250V | T1.25A 250V |
| 9124 | T2.5A 250V | T1.25A 250V |
| 9122A | T3.15A 250V | T1.5A 250V |
| 9123A | T3.15A 250V | T1.5A 250V |
| 9150 | T10A 250V | T5A 250V |
| 9151 | T10A 250V | T5A 250V |
| 9152 | T10A 250V | T5A 250V |
| 9153 | T10A 250V | T5A 250V |

Replace blown fuses according to the table above.

## 1.6 Adjusting the Carrying Handle

To adjust the position, grasp the handle by the sides and pull outward. Then rotate the handle to the desired position.

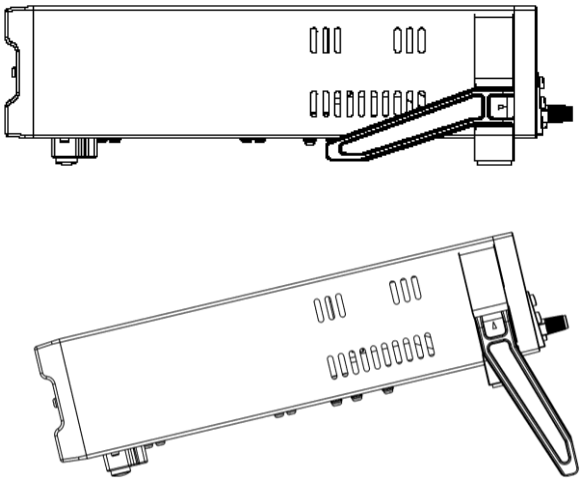

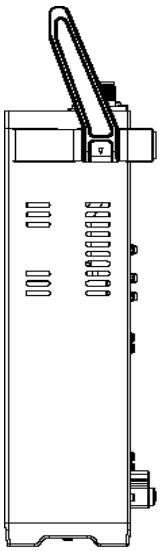

## Dimensions:

214.5 mm (W) x 88.2 mm (H) x 354.6 mm (D)  all units in mm

**<u>For Models</u>**: 9120A, 9121A, 9122A, 9123A, 9124

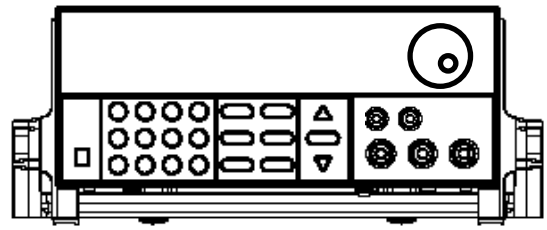

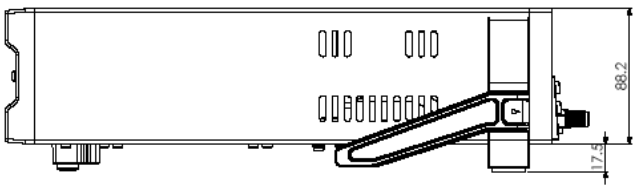


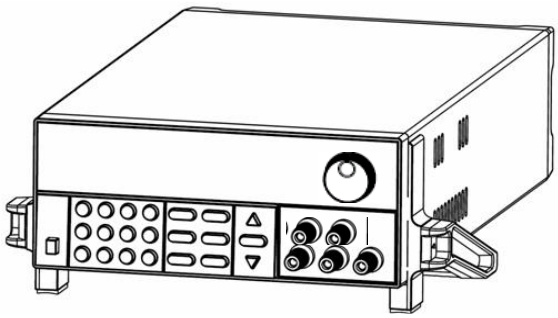

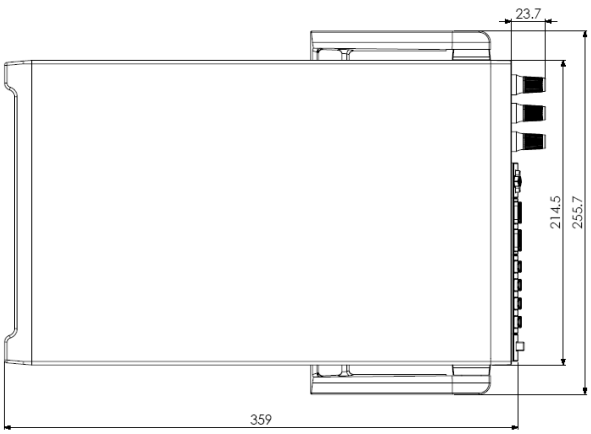

**For Models**: 9150, 9151, 9152, 9153

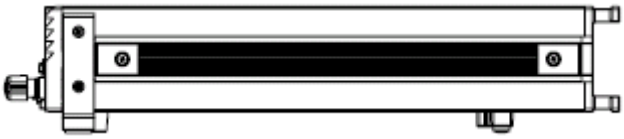

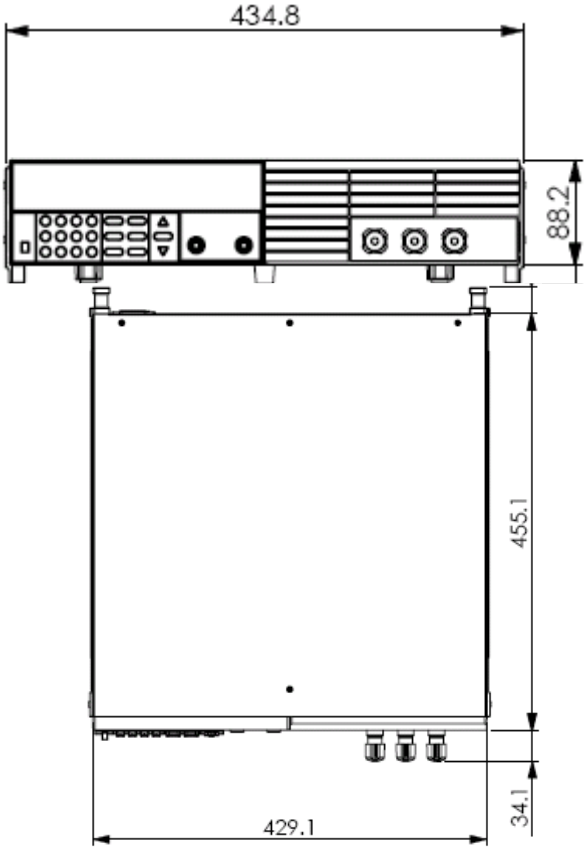


## 1.7 Rack Mounting the Instrument

You can mount the power supply in a standard 19-inch rack cabinet using the IT-E151 rack mount kit.

---

Note: Remove the carrying handle and the two plastic ears before rack-mounting the instrument. To remove the handle, grasp the handle on the side, pull outwards and rotate it to a special position where the arrow on the handle and the arrow on the plastic ears are in opposite directions. Now you can pull the handle outwards. After removing the handle, you can remove the two plastic ears with a screw driver.

---

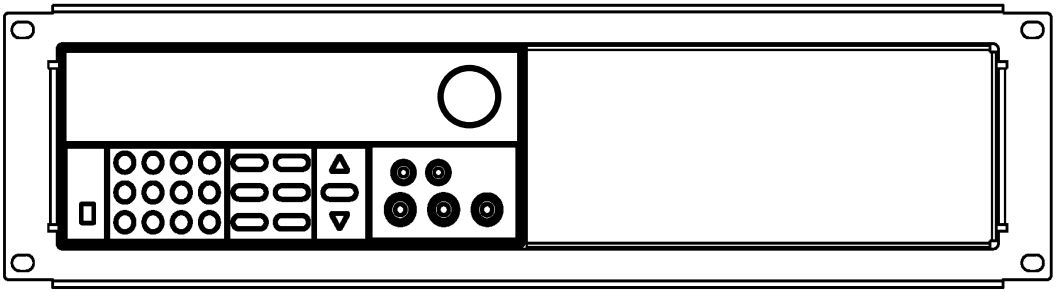

To rack mount a single instrument, order rack mount kit IT-E151

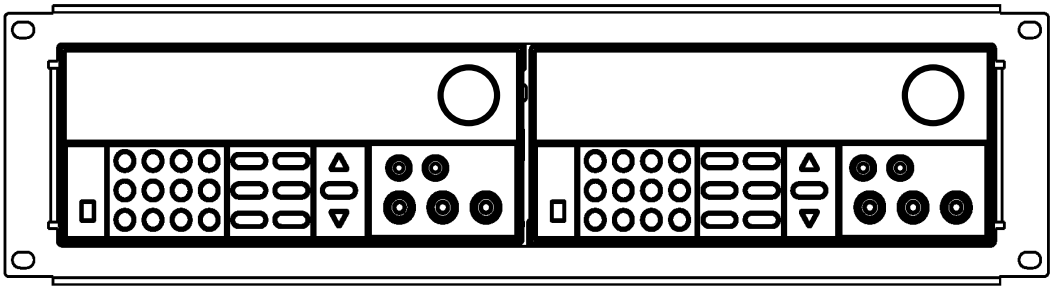

To rack mount two instruments (models 9120A, 9121A, 9122A, 9123A, 9124 only) side-by-side, order rack mount kit IT-E151, In this case you don't need to use the front cover panel.

# 3. Front-panel Operation

So far we have covered the quick start chapter which briefly introduced the front panel operation and how to check basic voltage and current functionality. This chapter describes in detail how to operate the instrument manually via the front-panel keys.

This chapter is divided into the following sections:

- Front-Panel Operation Overview
- Setting the Voltage
- Setting the Current
- Save/Recall Operation
- Menu Operation
- On/Off Operation
- Remote Sense and digital port functions
- mΩ Meter
- Digital Voltage Meter

## 3.1 Front Panel Keys

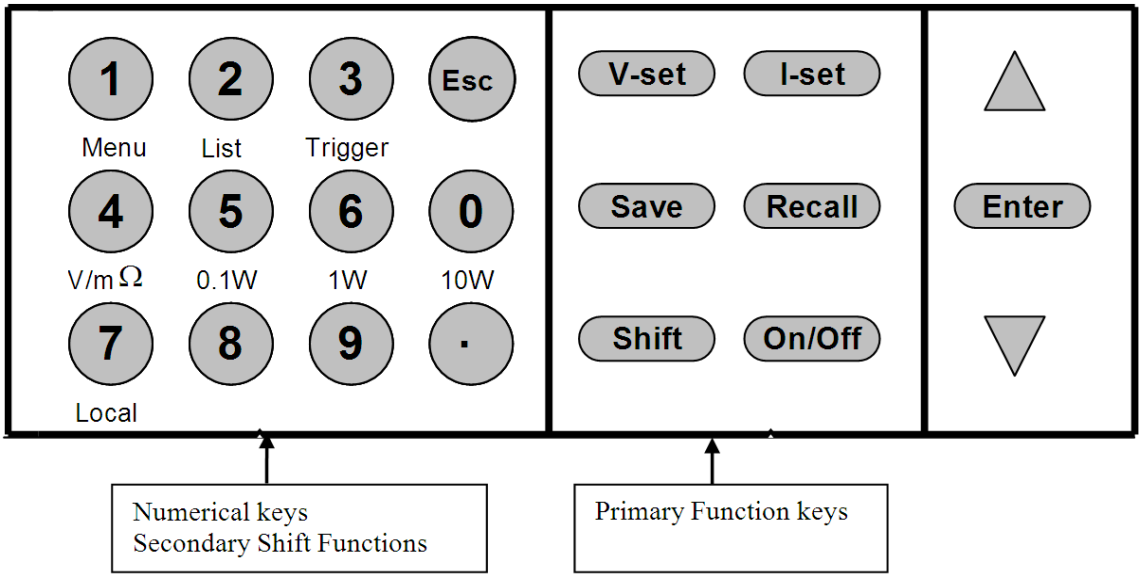


## Numerical Keys/Secondary Shift Functions

<u>Shift Functions</u>

V/mΩ: Toggle between DVM and mΩ Meter mode
0.1 W: Set the range of the mΩ Meter to 0.1 W
1 W: Set the range of the mΩ Meter to 1 W
10 W: Set the range of the mΩ Meter to 10 W
Menu Set the parameters of the power Supply
List Generate programs in List Mode
Trigger Generate a single trigger pulse (when configured for Immediate mode)
Local Enable front panel operation when in remote mode
0 – 9 Numerical keys for direct entry of values

## Primary Function Keys

| | |
|---|---|
| V-set | Set the voltage value |
| I-set | Set the current value |
| Save | Save the current operating data to internal memory |
| Recall | Recall operating data from internal memory |
| On/Off | Set the output state of the power supply |
| Shift | Use to access secondary functions |

## Up/Down and Entry key

▲: Up key

▼: Down key
**Enter**: Press to confirm numerical entries

## 3.2 Front-panel Operation Overview

1) The power supply at shipment is preconfigured for front-panel operation. At power-on, the power supply will automatically start up in front panel operation mode.

2) When the power supply is in remote operation mode, the front-panel is disabled. You can revert to Local mode, by pressing the Local button or by sending the appropriate SCPI command. Toggling between front-panel and remote operation modes will not result in any change of the output parameters.

3) The output of the power supply can be enabled or disabled from the front panel by pressing the Out on/off key. When the output is on, the CV or CC annunciator will turn on.

4) The VFD annunciators display the present operating status of the power supply. At power up, the following is displayed: The top row shows the actual output voltage and output current value and the state of the power supply. The second line shows the voltage value as measured by the DVM and the Set value of the Voltage. The bottom right field is also used to display the Current Set Value, the Menu parameters and the Ohm meter range.

## 3.3 Setting the Voltage

The Voltage can be adjusted from 0V to the maximum rated voltage of each model. There are 2 ways to set the constant voltage value.

Solution1:
Press the ▲ and ▼ keys or the knob to change the value of the least significant digit

Solution2:
1. Press V-set
2. Use the numeric keys 0 to 9 and confirm your entry by pressing Enter

## 3.4 Setting the Current

The Current output is adjustable from 0A to the maximum current value of each model.

1. Press I-Set
2. Enter a numerical value or use the ▲and ▼keys to change the current value
3. Press Enter to confirm the value

## 3.5 Save and Recall Operation

You can store up to 50 different operating states in memory locations 1 through 50. Each operating state includes a constant voltage value, constant current value, maximum output voltage value and voltage step value.

<u>To save a setting</u>:
Set the desired Voltage and Current value
Press the save Save key. Use the knob to scroll to one of the memory locations 1 – 50. Press ENTER

to assign and store the current settings to the selected memory location

To recall a setting:

Press the Recall key. Use the knob to scroll to the memory location where the settings you want to recall are stored. Press ENTER to recall and activate those settings

You can also use the SCPI command:*SAV *RCL to save and recall respectively.

## 3.6 Menu Operation

### 3.6.1 Menu Description

Press Shift :Menu to enter menu mode. The menu parameters will be displayed in the bottom right field of the display. Use the ▲ and ▼ keys to scroll through the menu list and press ENTER to select a menu and view the parameters. Press ESC to return to the higher level menu and to return to the main operating mode.

| | | | |
|---|---|---|---|
| MENU | | | |
| Config | | | |
| | Config Init. | | Return to the factory default setup value. |
| | Out Recall | | Set the Power ON/OFF state after power up. |
| | | On | “Remembers” and restores the Power ON/OFF state of the power supply before power was turned off. |
| | | Off<Default> | Disable this function. |
| | PWR-ON Recall | | Recall operating parameters of power supply after power up |
| | | On | “Remembers” and restores the operating parameters of the power supply (voltage, current settings..) before power was turned off. |
| | | Off<Default> | Disable this function. |
| | Key Sound Set | | Keypad sound setting. |
| | | On<Default> | Enable key sound. |
| | | Off | Disable key sound |
| | Knob Lock Set | | Enable/disable the rotary knob. |
| | | On | Lock the rotary knob. |
| | | Off< Default > | Unlock the rotary knob. |
| | Remote Sense | | Setup voltage measurement Mode. |
| | | On | The power supply will measure the input voltage at the remote sense connector. |
| | | Off< Default > | The power supply will measure the input voltage at the front panel connector. |
| | ShortCut Call | | Shortcut of the recall function |
| | | On | Enable this function |
| | | Off<Default> | Disable this function |
| | Meter Rate | | Set the update speed of the power supply meter |
| | | High | High speed |
| | | Low <Default> | Low speed |
| | Baudrate Set | | |
| | | Baudrate 4800 <Default> | |
| | | Baudrate 9600 | |
| | | Baudrate 19200 | |
| | | Baudrate 38400 | |
| | Comm. Parity | | Configure the parity bit. |

| | | | |
|---|---|---|---|
| | | None< Default > | |
| | | Even | |
| | | Odd | |
| | Address Set | | Set the communication address (range from 0 to 30) |
| | | Address=＊＊ | |
| | Port Mode | | Select mode of digital port |
| | | Trigger< Def > | |
| | | RI/DFI | ***Note:*** DFI is not available for models 9150, 9151, 9152, 9153 |
| | | DIGITAL I/O | ***Note:*** Digital output not available for models 9150, 9151, 9152, 9153 |
| | Trig Source | | Setting the trigger mode |
| | | Immediat<Def> | Pressing Shift + Trigger keys will generate a trigger pulse |
| | | External | Ext. Trigger signal is applied to the digital port in the rear panel. |
| | | Bus | Remote command trigger mode. |
| | RI Mode | | Configure the Remote Inhibit (RI) mode |
| | | Off< Default > | Disable this function |
| | | Latching | |
| | | Live | |
| | DFI Source | | Configure the Discrete Fault Indicator (DFI) mode<br>***Note:*** Not used for models 9150, 9151, 9152, 9153 |
| | | Off< Default > | |
| | | QUES | Question Bit |
| | | OPER | Operation Bit |
| | | ESB | Event State Bit |
| | | RQS | Require Bit |
| | Key Lock Set | | Setting keypad password.<br>Press Enter directly to disable the key lock function. |
| | | Password= **** | |
| | Exit | | |
| System Set | | | |
| | Max Volt. set | | Set the Maximum Voltage. |
| | | Max= **** | |
| | Step Volt Set | | Set the voltage step |
| | | Step=**** | |
| | Exit | | |
| List Set | | Configure list files | |
| | Call ListFile | | Recall list operation file. |
| | | Recall * | |
| | Edit ListFile | | Edit list operation file. |
| | | Continuous | |
| | | | Once |
| | | | Repeat |
| | | Step | |
| | | | Once |
| | | | Repeat |
| | Save Mode Set | | Users can allocate 4 types of memory space to save the list file. |
| | | 8 X 25 Steps | |
| | | 4 X 50 Steps | |

| | | | |
|---|---|---|---|
| | | 2 X 100 Steps | |
| | | 1 X 200 Steps | |
| | Exit | | |
| Out On Timer | Output timer. If Timer State is set to ON, power supply output will turn off after the timer elapsed. | | |
| | Timer State | Setting POWER ON timer state | |
| | | On | Enable Output Timer. Output will turn off after value set in menu “Timer Set” counted down to zero. |
| | | Off< Default > | |
| | Timer Set | Setting time of POWER ON timer. | |
| | | Timer= **S | |
| | Exit | | |
| Exit | | | |

### 3.6.2 Menu Function

#### ShortCut Recall

This parameter enables a Shortcut version of the Recall functionality available by pressing the Recall button ( see 3.5)

To enable this function, do the following:

1. Press Shift + MENU When Config is displayed, press ENTER
2. Press ▲, ▼ to scroll to ShortCut Recall then press ENTER
3. Press ▲, ▼to turn this feature On， press ENTER to confirm.
4. Press Esc twice to exit from the menu

Now you can conveniently recall up to 9 settings by simply pressing one of the corresponding number keys 1 – 9. The setting previously stored at that location, (using the Save function), will be retrieved and activated. If the selected location is empty, EEPROM ERROR will be displayed.

#### Setting the Baud Rate (>BAUDRATE)

This parameter configures the baud rate for serial communication. Possible values are 4800, 9600, 19200 or 38400. When operating the power supply in remote mode, make sure that you configure identical baud rate settings for the power supply and the computer. The default setting is 4800.

#### Setting Address (>ADDRESS)

With this parameter, it is possible to address each instrument. The address range is 0 to 30. The default address is zero. This is useful when multiple instruments of the same model are connected to a PC for remote connection. The address is used to identify the instrument to control.

#### Port Mode

A 4-pin connector in the rear panel is provided for digital input and output signals. For models 9150, 9151, 9152, and 9153, it is a 2-pin connector. This digital port can be configured to provide Fault/Inhibit, External Trigger or Digital I/O functions. The signal level is TTL.

TRIGGER: Pins 1 and 2 can be used to apply external trigger sources to the power supply. These pins can also be used to control the list operation

RI/DFI: The Inhibit Input pin can be used to control the output state of the power supply (RI function). The Fault Output pin (DFI function) can be used to indicate internal faults of the power supply.

***NOTE:*** The Fault indicator function (DFI) is only available for models 9120A, 9121A, 9122A, 9123A, and 9124.

DIGITAL I/O: Read and control output and input state of the 2 available pins. For models 9150, 9151, 9152, and 9153, only digital input is available.

**For Models**: 9120A, 9121A, 9122A, 9123A, 9124

| Mode / Pin | Trigger | RI/DFI | DIGITAL I/O |
|---|---|---|---|
| 1 (INH) | Trigger in | Inhibit Input | Digital Input |
| 2 (GND) | GND | GND | GND |
| 3 (FLT) | Not Used | Fault Indicator Output | Digital Output |
| 4 (GND) | Not Used | GND | GND |

**For Models**: 9150, 9151, 9152, 9153

| Mode / Pin | Trigger | RI | DIGITAL I/O |
|---|---|---|---|
| 1 (TRIN) | Trigger in | Inhibit Input | Digital Input |
| 2 (GND) | GND | GND | GND |

## Trigger Operation

The power supply supports 3 different trigger modes. Immediate, External and Bus. Configure one of the trigger sources before performing trigger operation.

- Trigger Key:
  When this function is enabled, you can generate an immediate trigger pulse by pressing Shift Trigger.

- External trigger signal (TTL):
  When this function is enabled, the power supply can be triggered with a TTL pulse applied to pin 1 of the terminal connector in the rear. The TTL on pulse width should be at least 5 ms.

- Bus:
  When this function is enabled, you can trigger the power supply by sending a *TRG or TRIgger command to the power supply

## Remote Inhibit (RI) - Input

Used to turn off the output of the power supply. Can be used to turn off several power supplies simultaneously.

The RI input has 3 modes: LATCHING, LIVE and OFF

LATCHING When the TTL signal at the RI port transitions from TTL High to Low, the output of the power supply will turn off.

LIVE The output state of the power supply changes according to the signal level applied to the RI port. If the level is TTL high, the power supply output is on; if the level at the RI port is TTL Low, the output of the power supply is off.

OFF The signal applied to the RI port does not affect the output state of the power supply.

## Discrete Fault Interupt (DFI) - Output

***NOTE:*** Available for models 9120A, 9121A, 9122A, 9123A, and 9124A only.
Used to indicate that a fault has occurred in power supply.

The DFI function can be activated by state changes of the QUES, OPER, ESB, RQS bits

QUES: The output level of DFI reflects the state of the QUES bit. When the QUES bit is 1, the DFI output goes to a low level. When QUES bit is 0, DFI output goes High

OPER: The output level of DFI reflects the state of the OPER bit.

ESB: The output level of DFI reflects the state of the ESB bit.

RQS: The output level of DFI reflects the state of the RQS bit.

OFF: The output level of the DFI port remains high.

## KEY LOCK

It is possible to set a password to lock the function keys. After setting the password, all the function keys on the front panel will be locked except the OUT On/Off key. You must enter the correct password to enable the keys again. If you don't want to lock the function keys and you selected the ">KEY LOCK" menu, simply press the "Enter" key. Do NOT enter any numbers.

---

When shipped from the factory, no password is set and the function keys are unlocked. The start bit of your desired password should not be 0.

---

## List Set

This mode allows you to create a sequence of steps, store it into the power supply's non volatile memory and execute it. The input parameters for generating a list include the name of the list file, the input steps (no more than 200 steps), the step time (the minimum is 1 mS) and the value of each step. The list file can be stored in ROM with a capacity of 4K from where it can be recalled. This memory area is divided into four areas 1,2,3,4. Each area can store a certain amount of groups, and each group has an assigned maximum capacity according to the table below:

| Memory area | Number of groups/ area | Capacity/group |
|---|---|---|
| 1 | 1 | 4KByte |
| 2 | 2 | 2KByte |
| 3 | 4 | 1KByte |
| 4 | 8 | 512 Byte |

Example: Group C can store 4 groups, each group has a maximum capacity of 1KByte.

The power supply executes a list in CONTINIOUS or Step mode. In CONTINIOUS mode, the power supply will start executing the list once. As soon as a trigger signal is received, it will wait until the next trigger signal is received.
Before you edit the list file, set the trigger source in the menu to “immediate”.

Example:

1) Press Shift + MENU
2) Press up or down key to select “Config”, press Enter to confirm.
3) Press up or down key to select “Trig Source”, press Enter to confirm.
4) Press up or down key to select “Immediat”, press Enter to confirm.

**Operation:**

Generate file: 2 cycles, continuous mode

1） Press Shift + Menu into menu operation.
2） VFD displays Config, press ▼ to select List Set， press Enter to confirm.
3） VFD displays Call ListFile, press ▼ to select Edit ListFile, press Enter to confirm.
4） VFD displays Continuous, press Enter to confirm.
5） VFD displays Repeat, press Enter to confirm
6） VFD displays Second, Select ms then press Enter to confirm
7） VFD displays List Count= _, press numeric key or move the rotary knob, set number of cycles (in this example, count is 2), press Enter to confirm.
8） VFD displays 1th=＊.＊＊＊＊V, press numeric key or move the rotary knob, set the maximum voltage, press Enter to confirm.
9） VFD displays 1th=＊.＊＊＊＊A, press numeric key or move the rotary knob, set the maximum current, press Enter to confirm.
10） VFD displays 1th=＊mS, press numeric key or move the rotary knob, set delay time, press Enter to confirm.
11） VFD displays 2th=＊.＊＊＊＊V, press numeric key or move the rotary knob, set the maximum voltage, press Enter to confirm.
12） VFD displays 2th=＊.＊＊＊＊A, press numeric key or move the rotary knob, set the maximum current, press Enter to confirm.
13） VFD displays 2th=＊mS, press numeric key or move the rotary knob, set delay time, press Enter to confirm.
14） VFD display Store File_, press numeric key or move the rotary knob, set the register number（1 to 8）, press Enter to confirm.
15） Press Esc two times to escape menu operation.

Execute file

16） Press Shift + List to set the list file, then press Shift + Trigger to run the list file. Press Shift + List to stop.

If you have created several list files, you can call the list file that you need by “Call ListFile” function in the menu. Press Esc two times to exit menu operation. And then press Shift + List to set it, press Shift + Trigger to run the file that you called. Press Shift + List to stop running.

Continuous mode: Once the trigger signal is received, the programmed list will be executed once. Once finished, the instrument will pause until the next trigger signal is received.

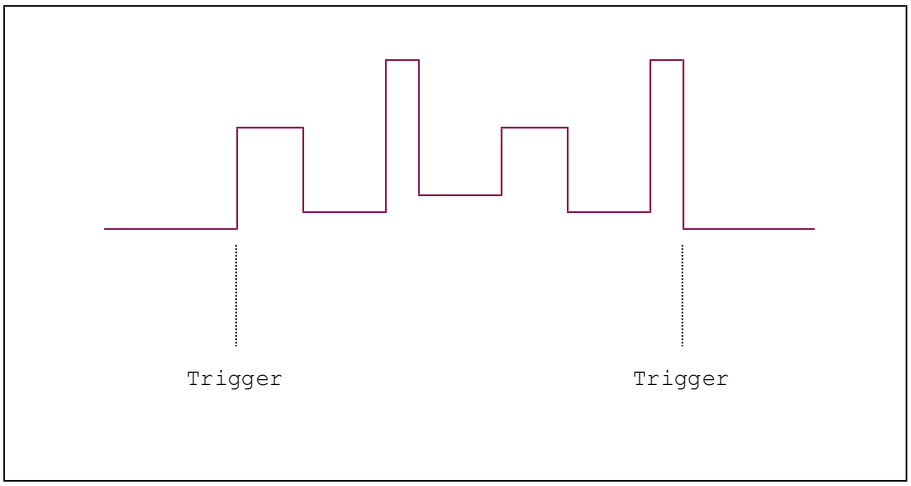


Step mode: The power supply will advance to the next step only after it receives a trigger signal.
(Note: In this mode, list step timing parameter will not be prompted for user input or it will be ignored if controlled with remote commands because the delay between steps will be dependent on trigger instead.)

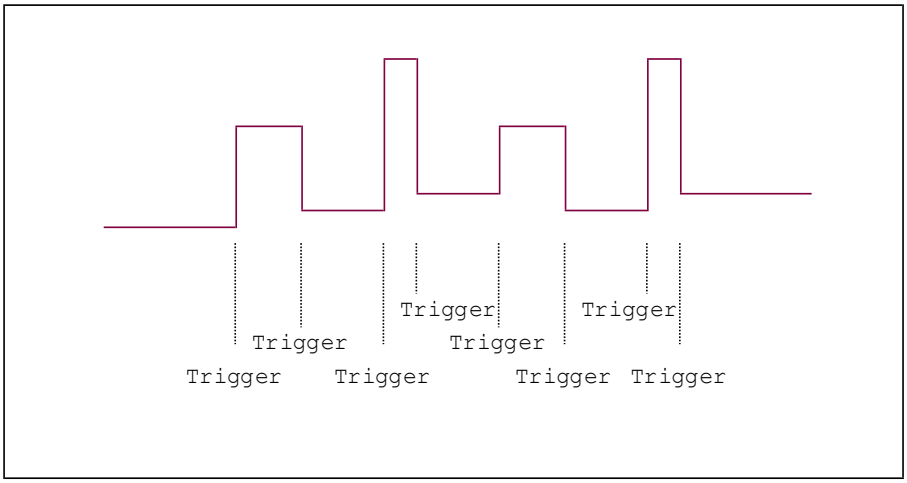


**Digital I/O**

When the digital port of the power supply mode is in DIGITAL I/O mode and the power supply is configured for remote operation, you can send SCPI command （DIGital:INPut[:STATe?] and DIGital:OUTPut[:STATe?]）to read and set the state of the output and input port.

***NOTE:*** Digital output is not available for models 9150, 9151, 9152, and 9153.

## 3.7 Output Operation

For front panel operation, press On/Off to enable/disable the output. If the power supply is in remote control mode, you can send SCPI command (OUTPut ON|OFF) to change the state of output.

## 3.8 Remote Sense and digital port functions

### 8 pin connector in rear panel (Models 9120A, 9121A, 9122A, 9123A, 9124)

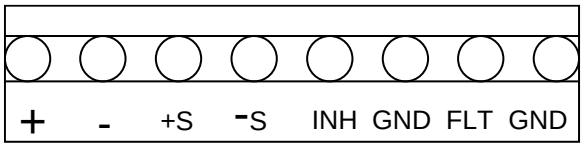


### 4 pin connector in rear panel (Models 9150, 9151, 9152, 9153)

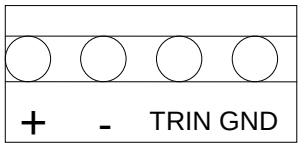


**+S,-S Remote sense pins**

Remote voltage sensing is used to maintain good regulation at the load and reduce the degradation of regulation that would occur due to the voltage drop in the leads between the power supply and the load. By connecting the supply for remote voltage sensing, voltage is sensed at the load rather than at the supply's output terminals. This will allow the supply to automatically compensate for the voltage drop in the load leads and improve regulation.

You must set remote sense mode before you start remote test function.

**+,- Output pins**

**For Models 9120A, 9121A, 9122A, 9123A, 9124:** These pins are identical to the output terminals in the front.
**For Models 9150, 9151, 9152, 9153:** These pins are the same as remote sense pins.

**INH Inhibit Input pin**

This pin has multiple functions:

a) When “Port Mode” in the menu is set to “Trigger”, “INH” pin is configured as trigger input. For models 9150, 9151, 9152, and 9153, “TRIN” pin is configured as trigger input.

b) When “Port Mode” in the menu is set to “RI/DFI”, “INH” pin can be used to turn the power supply output on/off. For models 9150, 9151, 9152, and 9153, “TRIN” pin is used instead.

INH can be configured in 3 ways:

LATCHING: When the level of INH port changes from high to low, the output of power supply turns off.

LIVE: The output state of power supply changes according to the level of the INH port. If the level of INH is TTL High, the output is on. If the level at pin INH is TTL Low, the output of the power supply is off.

OFF: The level state of INH does not affect the output state of the power supply.

c) When "Port Mode" in the menu is set to "DIGITAL I/O", "INH" pin functions as a digital input pin. For models 9150, 9151, 9152, and 9153, "TRIN" pin is used for digital input. For digital output, "FLT" is used. Digital output is not available for models 9150 to 9153. The status of the pin can be read via SCPI command.

**FLT: Fault Output pin**

(Available for models 9120A, 9121A, 9122A, 9123A, 9124 only)

This pin has multiple functions:

a) When "Port Mode" in the menu is set to "Trigger", FLT has no function.

b) When "Port Mode" in the menu is set to "RI/DFI", the FLT pin can be used to determine the reason of a power supply fault.

The status of FLT can be derived from bits QUES, OPER, ESB, RQS or it can be disabled

QUES: The output level of FLT reflects the state of the QUES bit. When the QUES bit is 1, FLT output a Low signal, otherwise, if QUES bit is 0, FLT goes High.

OPER: The output level of FLT reflects the of the OPER bit.

ESB: The output level of FLT reflects the state of the ESB bit.

RQS: The output level of FLT reflects the state of the RQS bit.

OFF: The output level of FLT remains high.

c) When "Port Mode" in menu is set to "DIGITAL I/O", FLT functions as an output pin. The status of the port can be programmed via SCPI command.

## 3.9 Digital Volt Meter (DVM)

The power supply provides a built-in Digital Volt meter which can measure DC volts in a range from 0 - 40V. The connectors are in the rear panel. The voltage value is displayed on the bottom left field of the display.

To measure voltages, connect the leads as shown here:

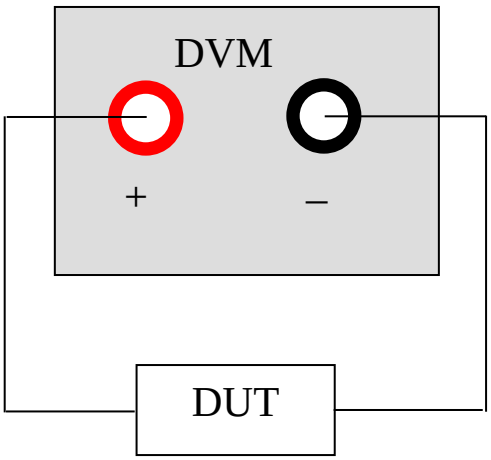

By default, the power supply is in DVM mode. Press Shift followed by V/mΩ to toggle between Voltmeter and mΩ Meter mode.

**NOTE:** The DVM **integrated inside** these power supplies is an added feature for the convenience of monitoring voltages of a setup being powered by the same power supply with the DVM. It is not meant to be used as a standalone measuring unit. Due to the input of the DVM being partially integrated to the internal circuitry of the power supply, and the DVM not having a floating reference, there are limitations on the applications it can be used for. For example, it cannot be used to measure negative voltages (only positive voltage, 0-40VDC), it cannot measure a dry cell battery, and it cannot measure a voltage source with isolated GND.

### 3.10 Milliohm Meter

The instrument is also equipped with a Milliohm Meter which can accurately measure resistance up to 10 Ω.

To protect the resistor, make sure to select an appropriate power range before connecting it to the power supply.

To measure resistance, connect the resistor as shown below:

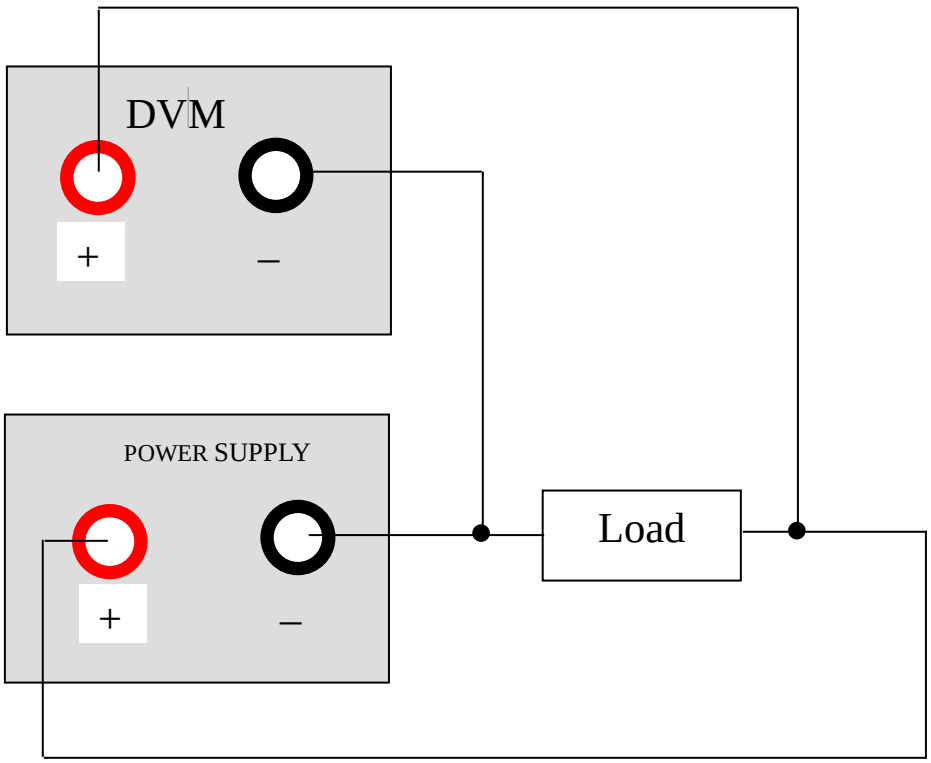


To measure resistance:

1) Enable Ohmmeter mode: Press Shift followed by V/mΩ（Display will show ---.—mΩ Range 0.1 W）
2) Press Shift followed by 0.1 W /1 W /10 W to select an appropriate range for the resistor you are measuring.

| | | | |
|---|---|---|---|
| Measurement range | 0.1 W | 1 W | 10 W |
| Test voltage (Output) | 1 V | 3.3 V | 10 V |

# 4. Remote Operation

The DB9 TTL interface connector on the rear panel of the power supply can be connected to a RS-232, USB or GPIB (model 9123A only) interface via a serial converter cable. This chapter describes how to use a computer to control the output of the power supply.

## 4.1 Serial adapter cables

### RS232 to TTL serial Converter cable IT-E131

The DB9 interface connector on the rear panel of the power supply provides a TTL level interface. Use the communication cable (IT-E131) to connect the DB9 interface connector of the power supply to the RS-232 interface connector of the computer

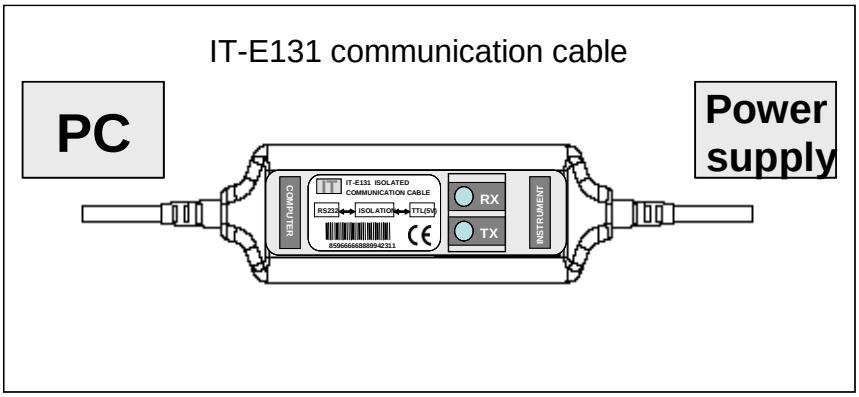


**Note:** It is **<u>not possible</u>** to connect the DB9 TTL connector on the power supply's rear panel supply via a <u>standard</u> RS232 cable to a PC's RS232 port.

### USB to TTL serial Converter cable IT-E132

The DB9 interface connector on the rear panel of the power supply provides a TTL level interface. Use the communication cable (IT-E132) to connect the DB9 interface connector of the power supply to the USB interface connector of the computer.

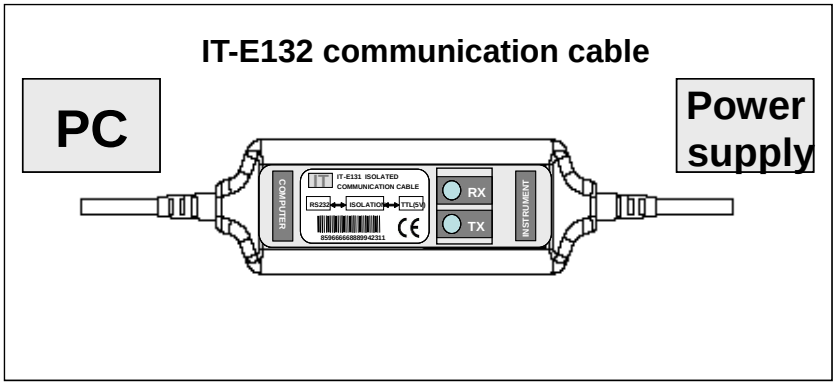

**Note**: Before you can use the USB communication cable, you must install the USB driver which can be found on the included installation disk. The driver can also be downloaded at www.bkprecision.com

**GPIB to TTL adapter IT-E135 (Model 9123A only)**

The DB9 interface connector on the rear panel of the power supply provides a TTL voltage level interface. Use the communication adapter IT-E135 to communicate via GPIB

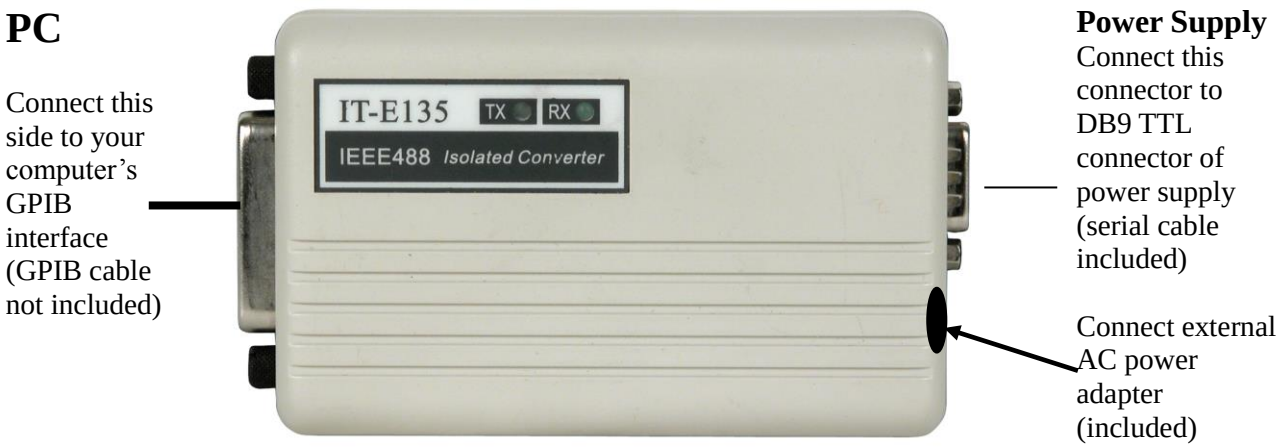


Recommended power up sequence:

Connect the IT-E135 adapter to your computer and to the power supply as indicated in the above figure. Connect the external power adapter. Both TX and RX LED should be lit (provided the power supply is turned off)
Turn on power supply. The TX and RX LEDs will turn off
For maximum throughput, set the baudrate to 38400. Set parity to NONE (default setting). Set address to the desired GPIB instrument address.

Note: The RX LED and TX LEDs will flicker to indicate activity on the GPIB bus. The RX LED indicates a write command (from controller's perspective), the TX LED will indicate data transmission from power supply to GPIB controller.

## 4.2 Communication between Power Supply and PC

Before putting the instrument into remote operation, make sure that the baud rate, parity bit and communication address settings on the power supply and computer side are identical, otherwise communication will not be possible.

1. Address Range is 0 to 30. Default setting is 0.
2. Baud rate: 4800,9600,19200 and 38400 are selectable, default setting is 9600
3. Parity and Data bits： None/8 bits (default setting)

Even/8 bits
Odd/8 bits

4. Stop bits：1 (fixed)
5. Start Bits: 1 (fixed)

Data Frame Format

| | | | |
|---|---|---|---|
| Parity=None | Start Bit | 8 Data Bits | Stop Bit |

| | | | | |
|---|---|---|---|---|
| Parity=Odd, Even | Start Bit | 8 Data Bits | Parity Bit | Stop Bit |

**End of String character is '\n' (0x0a)**

**DB9 Interface Details**

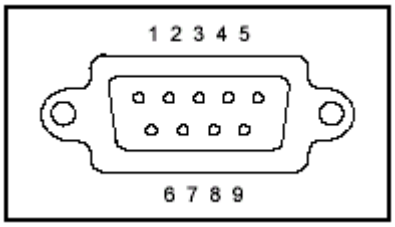


The DB9 connector in the rear panel of the power supply provides a TTL level signal .It can be connected to a standard PC interface via the IT-E131, IT-E132 or IT-E135 isolated converter/adapter.

**Flow Control**

There are no hardware flow controls for sending and receiving commands to the power supply. The average time it takes to both send and receive every command is approximately 200ms. In the case of more complex commands, more time may be required to complete transmission.

---

**Note**: Configuration of address parameter

Communication via RS232 and USB: Setting of the address is optional. It is not required to communicate with the instrument. The address can be set from the front panel and is stored in non volatile memory. This feature is useful when communicating via USB, and connecting several instruments, e.g. via a USB hub. In this scenario, Windows assigns a virtual COM port to each device which is unknown prior to establishing communications with the instrument (could be

different each time). In this case, the user can correlate each virtual COM port randomly assigned by Windows with a user defined address.

Communication via GPIB: Setting of the address value is mandatory and corresponds to GPIB instrument address according to GPIB/IEEE-488 conventions. Valid values are 0 – 30.

---

### 4.3 SCPI Command Overview

Common IEEE488.2 Commands

```
*CLS
*ESE
*ESE?
*ESR?
*IDN?
*OPC
*OPC?
*PSC
*PSC?
*RST
*SRE
*SRE?
*STB?
*TRG
*SAV
*RCL
```

Essential SCPI Commands

```
SYSTem
        :ERRor[:NEXT]?
        :VERSion?,
        :ADDRess?
        :REMote
        :LOCal
        :RWLock

STATus
        :QUEStionable
                [:EVENt]?
                :CONDition?
                :ENABle   <VALUE>
                :ENABle?
        :OPERation
                :[EVENt]?
                : CONDition?
                :ENABle   <VALUE>
                :ENABle?
```

Calibration Command

```
CALibration
        :SECure
                [:STATe] {<ON|OFF>,<quoted code>}
                [:STATe]?
        :VOLTage
                :LEVel    {<level> }
                [:DATA]    {<numeric value>}
        :CURRent
                :LEVel    {<level> }
                [:DATA]    {<numeric value>}
        :DVM
                :LEVel {<level>}
                [:DATA] {<numeric value>}
        :SAVe
        :INITital
```

Output Commands

```
OUTPut
        [:STATe]    {<bool>}
        [:STATe]?
        :TIMer
                [:STATe]    {<bool>}
                [:STATe]?
                :DATA    {<timer>}
                :DATA?
 [SOURce:]
        MODE    {<FIXed|LIST|DRM>}
        MODE?
        VOLTage
                [:LEVel]    {<n>}
                [:LEVel]?
                :PROTection
                        :STATe {<bool>}
                        :STATe?
                        [:LEVel]    {<n>}
                        [:LEVel]?
        CURRent
                [:LEVel]    {<n>}
                [:LEVel]?
        LIST
                :MODE    {<mode>}
                :MODE?
                :STEP    {<step>}
                :STEP?
                :COUNt    {<n>}
                :COUNt?
                :CURRent
                        [:LEVel]    {<n>,<n>}
                        [:LEVel]?    {<n>}
                :VOLTage
                        [:LEVel]    {<n>,<n>}
                        [:LEVel]?    {<n>}
                :WIDth    {<n>,<n>}
                :WIDth?    {<n>}
                :NAME    {<string code>}
                :NAME?
```

```
                :AREA    {1|2|4|8}
                :AREA?
                :SAVe    {1|2|3|4|5|6|7|8}
                :RCL    {1|2|3|4|5|6|7|8}
                :UNIT {SECOND, MSECOND}
```

Input Measure Command

```
MEASure
        [:SCALar]
                :VOLTage[:DC]?
                :CURRent[:DC]?
                :POWer[:DC]?
                :DVM[:DC]?
                :RESistance[DC]?
```

Port Configuration Commands

```
[SOURce:]
        SYSTem
        : SENSe [:STATe]    {<bool>}
                        [:STATe]?
        PORT
            :FUNCtion {<TRIGger|RIDFi|DIGital>}
            : FUNCtion?
        RI
            :MODE {<OFF|LATChing|LIVE>}
            :MODE?
        DFI
            :SOURce {<OFF|QUES|OPER|ESB|RQS>}
            :SOURce?
        DIGital
            :OUTPut[:STATe] {<bool>}
            :INPut[:STATe]?
SENSe
        :RESistance:
                :RANGe    {LOW | MIDdle | HIGH>}
                :RANGe?
```

Trigger Command

```
TRIGger
        [:IMMediate]
        :SOURce {<source>}
```

SCPI Condition Register

You can obtain the state of the power supply and read parameters from the operation register. The different states of the power supply can be read from 7 condition registers. These registers are status byte register, standard event register, quest condition register and operation status register. The status byte register stores the information of 3 other registers. The following table provides the details on each register's meaning.

| BIT | Signal | Meaning |
|---|---|---|
| | | Operation status register |
| 0 | CAL | The power supply is calculating new calibration parameter. |
| 1 | WTG | The power supply is waiting for a trigger signal. |
| 2 | CV | The power supply is in constant voltage condition. |
| 3 | CC | The power supply is in constant current condition. |

| | | |
|---|---|---|
| 4 | RI | Show the input level condition of RI |
| | | Quest condition register |
| 0 | OV | Over voltage |
| 1 | OT | Over temperature |
| 2 | UNR | The output of the power supply is unregulated. |
| | | Standard event status register |
| 0 | OPC | Operation of power supply is completed. |
| 2 | QYE | Query error. Data of output array is missing. |
| 3 | DDE | Device-dependent error. Data stored in register is missing or error occurs in preliminary checkout. |
| 4 | EXE | Execution error. Command parameter overflows or the condition is not right. |
| 5 | CME | Command error. Syntax or semantic error occurs when receiving information. |
| 7 | PON | Power on. It is 1when power supply is reset. |
| | | Status byte register |
| 3 | QUES | If a quest enable condition changes, QUES is 1. |
| 5 | ESB | If a standard event status enable register changes, ESB is 1. |
| 6 | MSS | |
| | RQS | |
| 7 | OPER | If a operation event enable register changes, OPER is 1. |

Structure of condition register:

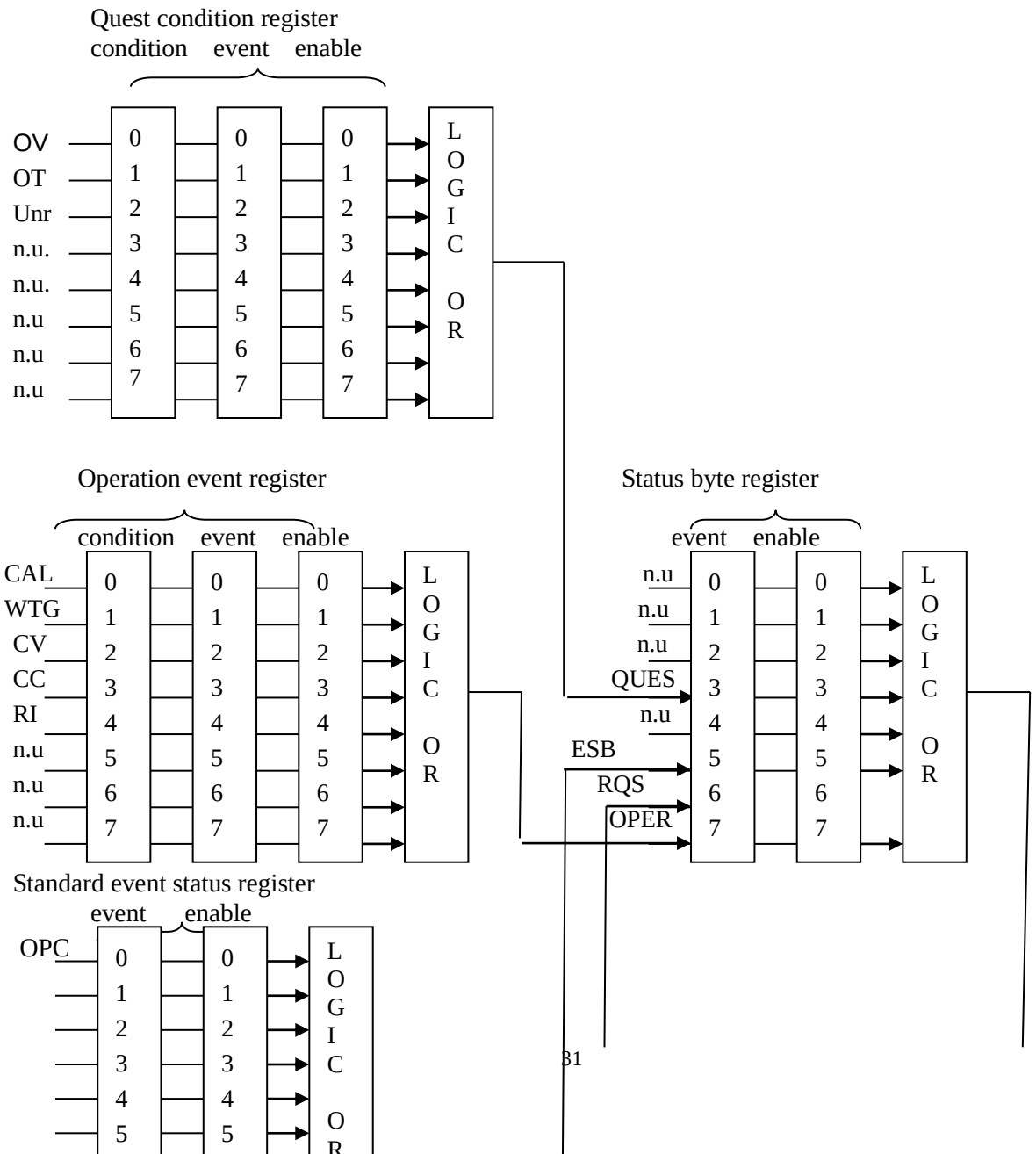

n.u
QYE
DDE
EXE
CME
n.u
PON

## 4.4 SCPI Command Description

Common IEEE488.2 Commands

### *CLS

This command clears the following registers:

- Standard event status register
- Quest condition register
- Operation event register
- Status byte register
- Error code

Command syntax: *CLS
Parameter: None

### *ESE

This command sets the parameter of the standard event enable register. The value determines which bit value of the standard event register is set to 1. The ESB bit in of status byte register will change to 1 to reflect the changes.

Command syntax: *ESE <NRf>
Parameter: 0~255
Reset value: Consult *PSC command
Example: *ESE 128
Query syntax: *ESE?
Return parameter: <NR1>
Reference command: *ESR? *PSC *STB?

Bit map of standard event status enable register

| Bit position | 7 | 6 | 5 | 4 | 3 | 2 | 1 | 0 |
|---|---|---|---|---|---|---|---|---|
| Bit Name | PON | Not used | CME | EXE | DDE | QYE | Not used | OPC |
| Bit Weight | 128 | | 32 | 16 | 8 | 4 | | |
| PON Power-on<br>CME Command error<br>EXE Execution error | | | | DDE Device-dependent error<br>QYE Query error<br>OPC Operation complete | | | | |

### *ESR?

This command queries the standard event status register. After executing this command, the standard event status register is reset. The bit definition of the standard event status register is identical to the standard event status enable register

Query syntax: *ESR?
Parameter: None

Return parameter: <NR1>
Reference command: *CLS *ESE *ESE? *OPC

## *IDN?

This command reads information about the power supply. The return value contains 4 segments divided by a comma.

Query syntax: *IDN?
Parameter: None
Return parameter: <AARD>

| segment | description |
|---|---|
| BK Precision | manufacturer |
| XXXX | product mode |
| XXXXXX | product serial number |
| VX．XX | software version number |

For example: BK PRECISION，9120A，000004，V1.01

## *OPC

When all commands sent to the instrument prior to this command have been executed, OPC of the standard event status register will be set to 1.

Command syntax: *OPC
Parameter: None
Query syntax: *OPC?
Return parameter: <NR1>

## *PSC

This command controls whether or not the power supply sends when it is reset.

1 OR ON: When power supply is reset, operation event enable register, query event enable register and standard event status register are all reset.

0 OR OFF: The data of status byte register, operation event enable register, quest event enable register and standard event status enable register is stored in nonvolatile register, and is recalled when power supply is reset.

Command syntax: *PSC <bool>
Parameter: 0|1|ON|OFF
Query syntax: *PSC?
Return parameter: 0|1
Reference command: *ESE *SRE STAT:OPER:ENAB STAT:QUES:ENAB

## *RST

This command resets the power supply to its default setting.

CAL:SEC:STAT OFF
OUTP OFF, CURR MAX
VOLT:PROT:MAX
VOLT: MIN
TRIG:SOUR BUS
SYST:SENS OFF
PORT:MODE TRIG
RI:MODE OFF
DFI:SOUR OFF
VOLT:PROT:STAT OFF

Command syntax: *RST
Parameter: None

## *SRE

This command can set the parameter of the status byte enable register. The value of this parameter determines which bit value of the status byte register is 1 and the byte will enable RQS of status byte register is 1. The bit definition of the status byte enable register is the same as the status byte register.

Command syntax: *SRE <NRf>
Parameter: 0~255
Reset value: Consult *PSC command
Example: *SRE 128
Query syntax: *SRE?
Return parameter: <NR1>
Reference Command: *ESE *ESR? *PSC *STB?

### *STB?

This command reads data from the status byte register. After executing this command, the status byte register is reset.

Query syntax: ***STB?**
Parameter: None
Return parameter: <NR1>
Reference command: ***CLS *ESE *ESR**

Bit map of the standard event status enable register

| Bit Position | 7 | 6 | 5 | 4 | 3 | 2 | 1 | 0 |
|---|---|---|---|---|---|---|---|---|
| Bit Name | OPER | RQS | ESB | no use | QUES | no use | no use | no use |
| Bit Value | 128 | 64 | 32 | | 8 | | | |

### *TRG

When the power supply's trigger source is set to Bus command, this command will generate a trigger signal. Its function is identical to the [SYSTem:]TRIGger command.

Command syntax: *TRG
Parameter: None
Reference command: TRIG TRIG:SOUR

### *SAV

This command saves the operating parameters of the power supply to non volatile memory. The parameters include constant current, constant voltage, maximum voltage value and step voltage values.

Command syntax: *SAV<NRf>
Parameter: 1~50
Example: *SAV 3
Reference command: *RCL

### *RCL

This command recalls the parameter saved with the *SAV command.

Command syntax: *RCL<NRf>
Parameter: 1~50
Example: *RCL 3
Reference command: *SAV

## Essential SCPI Commands

### SYSTem:ERRor[:NEXT]?

This command queries the error code and error information of the power supply.

(0) No error

| | |
|---|---|
| (1) | Too many numeric suffices in Command Spec |
| (10) | No Input Command to parse |
| (14) | Numeric suffix is invalid value |
| (16) | Invalid value in numeric or channel list, e.g. out of range |
| (17) | Invalid number of dimensions in a channel list |
| (20) | Parameter of type Numeric Value overflowed its storage |
| (30) | Wrong units for parameter |
| (40) | Wrong type of parameter(s) |
| (50) | Wrong number of parameters |
| (60) | Unmatched quotation mark (single/double) in parameters |
| (65) | Unmatched bracket |
| (70) | Command keywords were not recognized |
| (80) | No entry in list to retrieve (number list or channel list) |
| (90) | Too many dimensions in entry to be returned in parameters |
| (101) | Command Execution error |
| (100) | Too many command |
| (110) | Rxd error Parity |
| 1. | Error EEPROM |
| 2. | Config data error |
| 3. | Error Calibration data |
| 4. | Factory Data error |

Command syntax: SYST:ERR?
Parameter: None
Return parameter: <NR1>, <SRD>

### SYSTem:VERSion?

This command queries the software version.
Command syntax: SYST:VERS?
Parameter: None
Return parameter: <NR2>

### SYSTem:ADDRess?

This command queries the address of the power supply
Command syntax: SYST:ADDR?
Parameter: None
Return parameter: <NR2>

### SYSTem:REMote

This command puts the power supply in remote control mode.
Command syntax: SYST:REM
Parameter: None
Query syntax: None

### SYSTem:LOCal

This command configures the instrument for front panel operation
Command syntax: SYST:LOC
Parameter: None
Query syntax: None

### SYSTem:RWLock[:STATe]

This command also sets the instrument to remote control mode. When using this command, it is not possible to press LOCAL key on the front panel to revert back to manual mode.
Command syntax: SYST:RWL

### STATus:QUEStionable[:EVENt]?

This command queries the parameters of the quest event register. After execution, the quest event register is reset.

Query syntax: STATus:QUEStionable[:EVENt]?
Parameter: None
Return parameter: <NR1>
Reference command: STATus:QUEStionable:ENABle

Bit map of standard event status enable register

| Bit Position | 7 | 6 | 5 | 4 | 3 | 2 | 1 | 0 |
|---|---|---|---|---|---|---|---|---|
| Bit name | no use | no use | no use | no use | no use | unr | OT | OV |
| Bit Value | | | | | | 4 | 2 | 1 |

### STATus:QUEStionable:CONDition?

This command queries the parameters of the quest condition register. When a bit of the quest condition changes, the corresponding bit value in the quest event register will be set to 1.

Query syntax：STATus:QUEStionable: CONDition?
Parameter：None
Return parameter：<NR1>

### STATus:QUEStionable:ENABle

This command sets the parameter of the quest event enable register. This parameter determines which bit of the quest event register is set to 1. If a QUES condition changes, the QUES bit of status byte register will be set to 1.

Command syntax: STATus:QUEStionable:ENABle <NRf>
Parameter: 0~255
Reset value: Consult *PSC command
Example: STATus:QUEStionable:ENABle 128
Query syntax: STATus:QUEStionable:ENABle?
Return parameter: <NR1>
Reference command: *PSC

### STATus:OPERation[:EVENt]?

This command queries the parameters of the operation event register. After executing this command the operation event register is reset.

Query syntax: STATus: OPERation [:EVENt]?
Parameter: None
Return parameter: <NR1>
Reference command: STATus: OPERation:ENABle

Bit map of standard event status enable register

| Bit Position | 7 | 6 | 5 | 4 | 3 | 2 | 1 | 0 |
|---|---|---|---|---|---|---|---|---|
| Bit Name | no use | no use | no use | RI | CC | CV | WTG | CAL |
| Bit value | | | | 16 | 8 | 4 | 2 | 1 |

### STATus:OPERation:CONDition?

This command queries the parameters of the operation condition. When a parameter of the operation condition register changes, the corresponding bit in the operation event register will be set to 1.

Query syntax: STATus: OPERation: CONDition?
Parameter: None
Return parameter: <NR1>

### STATus:OPERation:ENABle

This command sets the parameter of the operation event enable register. The parameter determines which bit value of quest event register is set to 1. If a OPER condition changes, the OPER bit of the status byte register will be set to 1.

Command syntax: STATus: OPERation:ENABle <NRf>
Parameter: 0~255
Reset value: Consult *PSC command
Example: STATus: OPERation:ENABle 128
Query syntax: STATus: OPERation:ENABle?
Return parameter: <NR1>
Reference command: *PSC

## Output Commands

### OUTPut[:STATe]

This command sets the power supply output on or off.

Command syntax: OUTPut[:STATe] <bool>
Parameter: 0|1|ON|OFF
*RST value: OFF
Query syntax: OUTPut:STATe?
Return parameter: 0|1

***Usage:***

If output timer is required, send command OUTPUT:TIMER ON first, then set OUTPUT ON. These two commands must be set in this order to function properly.

### OUTPut:TIMer[:STATe]

This command sets the output timer state of the power supply.

Command syntax: OUTPut:TIMer[:STATe] <bool>
Parameter: 0|1|ON|OFF
*RST value: OFF
Query syntax: OUTPut:TIMer[:STATe]?
Return parameter: 0|1

***Usage:***

**To start Timer**

- First, set OUTPUT:TIMER ON, then set OUTPUT ON.

**To end Timer**

- Set OUTPUT:TIMER OFF to turn timer off.

**To check timer status**

- Send command OUTPUT:TIMER?

### OUTPut:TIMer:DATA

This command sets the time of the output timer. The unit is in SECOND and decimal fractions cannot be used for this command.

Command syntax: ONPut:TIMer:DATA <NR1>
Parameter: <NR1>
*RST value: 1
Query syntax: OUPut:TIMer:DATA?

Return parameter: <NR1>

### [SOURce:]MODE

This command configures the power supply for command fixed mode, list mode or DVM mode.
FIXed Command fixed mode
LIST List mode
DRM Digital milliohm meter
Command syntax: [SOURce:]MODE <mode>
Parameter: FIXed|LIST|DRM
*RST value: FIXed
Example: MODE FIX
Query syntax: [SOURce:] MODE？
Return parameter: <CRD>
***Usage:***
**MODE FIX** command can also be used to stop a list execution.

### [SOURce:]CURRent [:LEVel]

This command sets the current value of the power supply.
Command syntax: [SOURce:]CURRent [:LEVel] <NRf>
Parameter: MIN TO MAX|MIN|MAX
Unit: A mA
*RST value: MIN
Example: CURR 3A， CURR 30mA， CURR MAX， CURR MIN
Query syntax: [SOURce:]CURRent [:LEVel]?
Parameter: [MIN|MAX]
Example: CURR? , CURR? MAX, CURR? MIN
Return parameter: <NR2>

### [SOURce:]VOLTage[:LEVel]

This command sets the voltage value of the power supply.
Command syntax: [SOURce:]VOLTage[:LEVel] <NRf>
Parameter: MIN TO MAX|MIN|MAX
Unit: V mV kV
*RST value: MAX
Query syntax: [SOURce:]VOLTage[:LEVel]?
Parameter: [MIN|MAX]
Return parameter: <NR2>

## List File Commands

List file operations can be executed using standard SCPI commands. The commands must be executed in a certain order to successfully complete a list file.

Below is an example that demonstrates how to set a list in continuous mode with correct command order.

LIST:MODE CONT
LIST:STEP ONCE
LIST:COUNT 2
LIST:VOLT 1,2
LIST:VOLT 2,4
LIST:UNIT SECOND
LIST:WID 1,1
LIST:WID 2,2
LIST:NAME ‘TEST’

LIST:SAVE 1
MODE LIST

*Note: Be sure to specify LIST:AREA prior to using a set of list commands similar to above.*
For details on setting values for each commands, refer to the descriptions below.

## [SOURce:]LIST:MODE

This command sets the trigger condition for executing the list file

CONTinious List operation is continuous mode.
STEP List operation is step mode.
Command syntax: [SOURce:]LIST:MODE <CRD>
Parameter: CONTinious|STEP
Query syntax: [SOURce:]LIST:MODE?
Return parameter: <CRD>

## [SOURce:]LIST:STEP

This command sets the operation mode of the list file.
ONCE List operate once
REPeat Repeat list operation
Command syntax: [SOURce:]LIST:STEP <SRD>
Parameter: ONCE|REPeat
Query syntax: [SOURce:]LIST:STEP?
Return parameter: <CRD>

***Note to usage:***

When setting to LIST:STEP REPEAT, the list would run repeatedly for an indefinite amount of time. Below is an example set of commands to setup a repeated list properly:

*IDN?
PORT:FUNCTION TRIGGER
OUTPUT:TIMER OFF
OUPUT OFF
LIST AREA 4
LIST:COUNT 2
LIST:UNIT SECOND
TRIGGER:SOURCE BUS
LIST:VOLTAGE 1,5
LIST:VOLTAGE 2,1
LIST:WIDTH 1,4
LIST:WIDTH 2,2
LIST:MODE CONT
LIST:STEP REPEAT
LIST:NAME ‘MX’
LIST:SAVE 1
MODE LIST
OUTPUT ON
TRIGGER

## [SOURce:]LIST:COUNt

This command sets the number of steps for the list operation.
Command syntax: [SOURce:]LIST:COUNt <NRf>
Parameter: 2~400
Query syntax: [SOURce:]LIST:COUNt?

Parameter: None
Return parameter: <NR1>

## [SOURce:]LIST :CURRent[:LEVel]

This command sets the current step.

Command syntax: [SOURce:]LIST:CURRent[:LEVel]
Parameter: 0~30A
Unit: A mA
Example: LIST:CURR 1,3A;
Query syntax: [SOURce:]LIST:CURRent:[LEVel]?
Parameter: None
Example: LIST:CURR? 1;
Return parameter: <NR2>

## [SOURce:]LIST :VOLTage[:LEVel]

This command sets the voltage step.

Command syntax: [SOURce:]LIST:VOLTage [:LEVel] <NRf>
Parameter: 0~360V
Unit: V mV
Example: LIST:VOLT 1,3V;
Query syntax: [SOURce:]TRANsition: VOLTage:TLEVel?
Parameter: None
Example: LIST:VOLT? ;
Return parameter: <NR2>

## [SOURce:]LIST:WIDth

This command sets the minimum step time. Decimal fractions are not allowed for this command. Units are in seconds or milliseconds, which are set using LIST:UNIT command (see LIST:UNIT). Set units first before using this command.

Command syntax: [SOURce:]LIST:WIDth <NR1>
Parameter: MIN TO MAX|MIN|MAX
Unit: S mS
Example: LIST:WID 1, 100;
Query syntax: [SOURce:]LIST:WIDth?
Parameter: None
Example: LIST:WID? 1;
Return parameter: <NR1>

## [SOURce:]LIST:NAME

This command sets the name for the list file. Make sure the file name does not exceed 8 characters.

Command syntax: [SOURce:]LIST:NAME <name>
Parameter: <SRD>
Example: LIST:NAME ‘TEST’;
Query syntax: [SOURce:]LIST:NAME?
Return parameter: <SRD>

## [SOURce:]LIST:AREA

This command divides up the storage area for the list file in one of the 4 ways listed below.

1. 1 group per store area, 400 steps
2. 2 groups per storage area, each group contains 200 steps.
4. 4 groups per storage area, each group has 100 steps.
8. 8 groups of storage area, each group has 50 steps.

Command syntax: [SOURce:]LIST:AREA <NR1>

Parameter: 1|2|4|8
Example: LIST:AREA 1
Query syntax: [SOURce:]LIST:AREA?
Return parameter: <NR1>

### [SOURce:]LIST:SAVe

This command saves the list file to a register (non volatile memory). The memory can be written approximately 0.1 million times.

Command syntx：[SOURce:]LIST:SAVe <NR1>
Parameter: 1~8
Example: LIST:SAV 1

### [SOURce:]LIST:RCL

This command can recall the list file saved before from the register.

Command syntax: [SOURce:]LIST:SAV <NR1>
Parameter: 1~8
Example: LIST:SAV 1

### [SOURce:]LIST:UNIT

This command sets the unit for the list width in either seconds (SECOND) or milliseconds (MSECOND).

Command syntax: [SOURce:]LIST:UNIT <second>
Parameter: SECOND or MSECOND
Example: LIST:UNIT SECOND

Measurement commands

Note: All measurement commands have units in Volts (V), Ampere (A), or Watts (W). Decimal fractions are allowed.

### MEASure[:SCALar]:VOLTage[:DC]?

This command queries the input voltage of the power supply.

Command syntax: MEASure[:SCALar]:VOLTage[:DC]?
Parameter: None
Return parameter: <NR2>
Return parameter unit: V
Example: MEAS:VOLT?

### MEASure[:SCALar]:CURRent[:DC]?

This command queries the input current of the power supply.

Command syntax: MEASure[:SCALar]:CURRent[:DC]?
Parameter: None
Return parameter: <NR2>
Return parameter unit: A
Example: MEAS:CURR?

### MEASure[:SCALar]:POWer[:DC]?

This command queries the input power of the power supply.

Command syntax: MEASure[:SCALar]:POWer?
Parameter: None
Return parameter: <NR2>
Return parameter unit: W
Example: MEAS:POW?

### MEASure[:SCALar]:DVM[:DC]?

This command queries the voltage reading of the digital volt meter.

Command syntax: MEASure[:SCALar]:DVM?
Parameter: None
Return parameter: <NR2>
Return parameter unit: V
Example: MEAS:DVM?

### SENSe:RESistance:RANGe

This command sets the range of the milliohm meter.
LOW: 0.01W resistance range
MIDDLE: 0.1W resistance range
HIGH: 1W resistance range
Command syntax: SENSe:RESistance:RANGe
Parameter: LOW | MIDdle | HIGH
Example: RES:RANG LOW
Query syntax: SENSe:RESistance:RANGe?
Return parameter: <SRD>

### MEASure[:SCALar]:RESistance[:DC]?

This command queries the resistance reading of the milliohm meter.
Command syntax: MEASure[:SCALar]: RESistance?
Parameter: None
Return parameter: <NR2>
Return parameter unit: Ohm
Example: MEAS:RES?

## Interface Configuration Commands

### [SOURce:]SYSTem:SENSe [:STATe]{<bool>}

This command enables/disables the power supply's remote sense function.
Command syntax: SYSTem: SENSe [:STATe] <bool>
Parameter: 0|1|ON|OFF
Query syntax: SYSTem:SENSe [:STATe]?
*RST value: 0

### [SOURce:]PORT:FUNCtion

This command sets the mode of the port in the rear panel.
TRIGGER function: Pin1, pin2 are configured as external trigger source for the power supply and to control the list operation.
RI/DFI function: Inhibit Input controls the output state of the power supply. The Fault Output can indicate the reason for internal failure.
DIGITAL I/O function: Read and control the state of the digital port
Command syntax: SOURce:PORT:FUNCtion
Parameter: TRIGger|RIDFi|DIGital
Query syntax: SOURce:PORT:FUNCtion?
*RST value: TRIGger

### [SOURce:]RI:MODE

This command sets the input mode of the RI input pin

Command syntax: SOURce:RI:MODE
Parameter: OFF|LATChing|LIVE
Query syntax: SOURce:RI:MODE?

*RST value: OFF

### [SOURce:]DFI:SOURce

This command sets output source of the DFI output pin. (Not available for models 9150, 9151, 9152, and 9153)

Command syntax: SOURce:DFI:SOURce
Parameter: OFF|QUES|OPER|ESB|RQS
Query syntax: SOURce:DFI:SOURce?
*RST value: OFF

### [SOURce:]DIGital:OUTPut[:STATe]

This command sets the output state of the digital port. This command can be used when the mode of the port is set to DIGITAL. (Not available for models 9150, 9151, 9152, and 9153)
Command syntax: SOURce:OUTPut[:STATe]
Paremeter: OFF|ON|0|1

### [SOURce:]DIGital:INPut[:STATe]?

This command sets the input state of port. This command can be used when the mode of the port is set to DIGITAL.
Command syntax: SOURce:DIG:INPut[:STATe] ?

## Trigger commands

### TRIGger[:IMMediate]

When trigger source is command mode, this command will give a trigger signal. Its function is as the same as *TRG command.
Order syntax: * TRIGger[:IMMediate]
Parameter: None
Reference order: TRIG TRIG:SOUR

### TRIGger:SOURce

This command sets the trigger mode of the power supply.

- IMMediate:
  When this function is enabled, you can generate an immediate trigger pulse by pressing Shift plus Trigger.
- EXTernal trigger signal (TTL):
  When this function is enabled, the power supply can be triggered with a TTL pulse applied to pin 1 of the terminal connector in the rear. The TTL on pulse width should be at least 5 ms.
- BUS Command
  When this function is enabled, you can trigger the power supply by sending a *TRG or TRIgger command to the power supply

Command syntax: TRIGger:SOURce <mode>
Parameter: IMMediate|EXTernal|BUS
*RST value: KEY

***Note on usage:***

When using the trigger command to initiate a list, commands have to be set in a particular order in order to complete the trigger.

Example: Below shows how to initiate a list in continuous mode using trigger under bus command mode:

```
*IDN?
PORT:FUNCTION TRIGGER
TRIGGER:SOURCE BUS
LIST:MODE CONT
LIST:STEP ONCE
LIST:COUNT 2
LIST:VOLT 1,2
LIST:VOLT 2,4
LIST:UNIT SECOND
LIST:WID 1,1
LIST:WID 2,2
LIST:NAME ‘TEST’
LIST:SAVE 1
MODE LIST
TRIGGER
```

# 5. Specifications

## 5.1 Specifications

**Models 9120A, 9121A and 9124**

| Parameter | | 9120A | 9121A | 9124 |
|---|---|---|---|---|
| Output Ratings ( 0 °C~40 °C) | Voltage | 0 - 32 V | 0 - 20 V | 0 - 72 V |
| | Current | 0 - 3 A | 0 - 5 A | 0 - 1.2 A |
| | LVP* | 0 - 33 V | 0 - 21 V | 0 - 73 V |
| Load Regulation ±(%of output+offset) | Voltage | <0.01%+2 mV | | <0.01%+2 mV |
| | Current | <0.05%+1 mA | | <0.05%+0.3 mA |
| Line Regulation ±(%of output+offset) | Voltage | <0.01%+1 mV | | <0.01%+1 mV |
| | Current | <0.05%+0.1 mA | | ≤0.05%+0.05 mA |
| Programming resolution | Voltage | 0.5 mV | | 2 mV |
| | Current | 0.1 mA | | 0.02 mA |
| Readback/Meter resolution | Voltage | 0.1 mV | 0.1 mV | 0.5 mV |
| | Current | 0.01 mA | 0.05 mA | 0.01 mA |
| Front Panel setting resolution | Voltage | 0.5 mV | | 2 mV |
| | Current | 0.1 mA | | 0.02 mA |
| Programming accuracy, 12 months (25 °C ± 5 °C) ±(%of output+offset) | Voltage | <0.03%+3 mV | | ≤0.03%+6 mV |
| | Current | <0.05%+2 mA | | ≤0.05%+1 mA |
| Readback / Meter accuracy 12months (25 °C ± 5 °C) ±(%of output+offset) | Voltage | <0.02%+3 mV | | ≤0.02%+5 mV |
| | Current | <0.05%+2 mA | | ≤0.05%+1 mA |
| Ripple & Noise (20 Hz ~20 MHz) | Voltage | ≤ 4 $mV_{p-p}$ | ≤ 3 $mV_{p-p}$ | ≤ 5 $mV_{p-p}$ |
| | Current | ≤ 3 mArms | ≤ 3 mArms | ≤ 3 mArms |
| Temperature coefficient, (0 °C~40 °C) ±(%of output+offset) | Voltage | <0.02%+3 mV | | ≤0.02%+5 mV |
| | Current | <0.05%+2 mA | | <0.05%+0.5 mA |
| Readback temperature, coefficient, ±(%of output+offset) | Voltage | <0.02%+3 mV | | ≤0.02%+5 mV |
| | Current | <0.05%+2 mA | | ≤0.05%+0.5 mA |
| Transient response | µs | < 150 µs for output to recover to within 75 mV following a change from 100 mA to 1 A | | |
| DVM Accuracy | Voltage | 0 - 12 V range: 0.02%+2 mV<br>0 - 40 V range: 0.02%+3 mV | | |
| DVM Resolution | Voltage | 0 - 12 V range: 0.1 mV<br>0 - 40 V range: 1 mV | | |
| Ohm meter | mΩ | Accuracy: 0.1%, for Voltage and Current >= 10% of FS (full scale)<br>Accuracy: 0.3% for Voltage and Current = 3 to 10% of FS | | |
| Weight | net | 19.8 lbs, (9 kg) | | |
| Dimensions | WxHxD | 214.5 mm × 88.2 mm × 354.6 mm<br>8.45(W) x 3.47(H) x 13.9(D) inch | | |

*) LVP: Limit Voltage Protection. Limits the voltage than can be set either via the front panel or remote control command.

**NOTE:** Specifications and information are subject to change without notice. Please visit www.bkprecision.com for the most current product information.

**Models 9122A, 9123A**

| Parameter | 9122A | 9123A |
|---|---|---|

| | | | |
|---|---|---|---|
| Output Ratings ( 0 °C~40 °C) | Voltage | 0 - 60 V | 0 - 30 V |
| | Current | 0 - 2.5 A | 0 - 5 A |
| | LVP* | 0 - 61 V | 0 - 31 V |
| Load Regulation ±(%of output+offset) | Voltage | <0.01%+2 mV | |
| | Current | <0.05%+0.5 mA | <0.05%+1.5 mA |
| Line Regulation ±(%of output+offset) | Voltage | <0.01%+2 mV | <0.01%+1 mV |
| | Current | <0.05%+0.05 mA | <0.05%+0.1 mA |
| Programming resolution | Voltage | 1 mV | 0.5 mV |
| | Current | 0.1 mA | |
| Readback/Meter resolution | Voltage | 0.5 mV | 0.1 mV |
| | Current | 0.05 mA | |
| Front Panel setting resolution | Voltage | 1 mV | 0.5 mV |
| | Current | 0.1 mA | |
| Programming accuracy, 12 months (25 °C ± 5 °C) ±(%of output+offset) | Voltage | <0.03%+6 mV | <0.03%+3 mV |
| | Current | <0.05%+1.5 mA | <0.05%+2.5 mA |
| Readback / Meter accuracy 12months (25 °C ± 5 °C) ±(%of output+offset) | Voltage | <0.02%+6 mV | <0.02%+2.5 mV |
| | Current | <0.05%+1.5 mA | <0.05%+2.5 mA |
| Ripple & Noise (20 Hz ~20 MHz) | Voltage | ≤ 5 $mV_{p-p}$ | ≤ 4 $mV_{p-p}$ |
| | Current | ≤ 3 mA rms | ≤ 4 mA rms |
| Temperature coefficient, (0 °C~40 °C) ±(%of output+offset) | Voltage | <0.02%+6 mV | <0.02%+3 mV |
| | Current | <0.05%+1 mA | <0.05%+2 mA |
| Readback temperature, coefficient, ±(%of output+offset) | Voltage | <0.02%+6 mV | <0.02%+3 mV |
| | Current | <0.05%+1 mA | <0.05%+2 mA |
| Transient response | µs | < 150 µs for output to recover to within 75 mV following a change from 100 mA to 1 A | |
| DVM Accuracy | Voltage | 0 - 12 V range: 0.02%+2 mV<br>0 - 40 V range: 0.02%+3 mV | |
| DVM Resolution | Voltage | 0 - 12 V range: 0.1 mV<br>0 - 40 V range: 1 mV | |
| Ohm meter | mΩ | Accuracy: 0.1%, for Voltage and Current >= 10% of FS (full scale)<br>Accuracy: 0.3% for Voltage and Current = 3 to 10% of FS | |
| Weight | net | 21.2 lbs, (9.6 kg) | |
| Dimensions | WxHxD | 214.5 mm × 88.2 mm × 354.6 mm<br>8.45(W) x 3.47(H) x 13.9(D) inch | |

*) LVP: Limit Voltage Protection. Limits the voltage than can be set either via the front panel or remote control command.

**NOTE:** Specifications and information are subject to change without notice. Please visit www.bkprecision.com for the most current product information.

**Models 9150, 9151, 9152, 9153**

| Parameter | | 9150 | 9151 | 9152 | 9153 |
|---|---|---|---|---|---|
| Output Ratings ( 0 °C - 40 °C) | Voltage | 0 - 5.2 V | 0 - 20 V | 0 - 30 V | 0 - 60 V |
| | Current | 0 - 60 A | 0 - 27 A | 0 - 18 A | 0 - 9 A |
| | LVP* | 0 - 5.5 V | 0 - 21 V | 0 - 31 V | 0 - 61 V |

| | | | | |
|---|---|---|---|---|
| Load Regulation ±(%of output+offset) | Voltage | <0.01% + 2 mV | <0.01% + 1 mV | <0.01% + 1 mV |
| | Current | <0.1% + 10 mA | <0.1% + 5 mA | <0.1% + 2 mA |
| Line Regulation ±(%of output+offset) | Voltage | <0.02% + 0.1 mV | <0.02% + 1 mV | <0.02% + 1 mV |
| | Current | <0.1% + 1 mA | <0.01% + 1 mA | <0.01% + 0.1 mA |
| Programming resolution | Voltage | 0.1 mV | 1 mV | 1 mV |
| | Current | 1 mA | 1 mA | 0.1 mA |
| Readback/Meter resolution | Voltage | 0.1 mV | 0.1 mV | 0.1 mV |
| | Current | 1 mA | 0.1 mA | 0.1 mA |
| Front Panel setting resolution | Voltage | 0.1 mV | 0.5 mV | 0.5 mV |
| | Current | 1 mA | 1 mA | 1 mA |
| Programming accuracy, 12 months (25 °C ± 5 °C) ±(%of output+offset) | Voltage | <0.02%+2 mV | <0.02%+6 mV | <0.02%+12 mV |
| | Current | <0.1%+30 mA | <0.1%+15 mA | <0.05%+10 mA |
| Readback / Meter accuracy 12months (25 °C ± 5 °C) ±(%of output+offset) | Voltage | <0.02%+1.5 mV | <0.02%+3 mV | <0.02%+6 mV |
| | Current | <0.05%+15 mA | <0.05%+10 mA | <0.05%+5 mA |
| Ripple & Noise (20 Hz ~20 MHz) | Voltage | ≤0.005%+3 mVp-p | ≤0.005%+3 mVp-p | ≤0.005%+4 mVp-p |
| | Current | 15 mArms | 5 mArms | 3 mArms |
| Temperature coefficient, (0 °C~40 °C) ±(%of output+offset) | Voltage | <0.02%+2 mV | <0.02%+5 mV | <0.02%+10 mV |
| | Current | <0.1％+30 mA | <0.1％+15 mA | <0.05％+5 mA |
| Readback temperature, coefficient, ±(%of output+offset) | Voltage | <0.02%+2 mV | <0.02%+5 mV | <0.02%+10 mV |
| | Current | <0.1％+20 mA | ≤0.05%+10 mA | ≤0.05%+5 mA |
| DVM Accuracy | Voltage | 0~12 V range: 0.02%+2 mV<br>0~40 V range: 0.02%+3 mV | | |
| DVM Resolution | Voltage | 0~12 V range: 0.1 mV<br>0~40 V range: 1 mV | | |
| Ohm meter | mΩ | Accuracy: 0.1%, for Voltage and Current >= 10% of FS (full scale)<br>Accuracy: 0.3% for Voltage and Current = 3 to 10% of FS | | |
| Weight | net | 63.9 lbs (29 kg) | | |
| Dimensions | WxHxD | 429 mm × 88.2 mm × 458.9 mm<br>16.88(W) x 3.47(H) x 18.06(D) inch | | |

*) LVP: Limit Voltage Protection. Limits the voltage than can be set either via the front panel or remote control command.

**NOTE:** Specifications and information are subject to change without notice. Please visit www.bkprecision.com for the most current product information.

## 5.2 Supplemental Characteristics

### State Storage Memory

50 user-configurable stored states

### Recommended Calibration Interval

1 year

## AC Input Ratings (selectable via switch on the rear panel)

220 AV±10%，47～63 Hz
110 AV±10%，47～63 Hz

## Maximum output power

| 9120A | 9121A | 9124 | 9122A | 9123A | 9150 | 9151 | 9152 | 9153 |
|---|---|---|---|---|---|---|---|---|
| 96 W | 100 W | 86 W | 150 W | 150 W | 312 W | 540 W | 540 W | 540 W |

## Cooling

Fan cooled

## Operating Temperature

0 to 40 °C

## Storage Temperature

-20 to 70 °C.

## Environmental Conditions

Designed for indoor use in an installation category II, pollution degree 2 environments. Designed to operate at maximum relative humidity of 95% and at altitudes of up to 2000 meters.

# SERVICE INFORMATION

**Warranty Service:** Please go the support and service section on our website www.bkprecision.com to obtain a RMA #. Return the product in the original packaging with proof of purchase to the address below. Clearly state on the RMA the performance problem and return any leads, probes, connectors and accessories that you are using with the device.

**Non-Warranty Service:** Please go the support and service section on our website www.bkprecision.com to obtain a RMA #. Return the product in the original packaging to the address below. Clearly state on the RMA the performance problem and return any leads, probes, connectors and accessories that you are using with the device. Customers not on an open account must include payment in the form of a money order or credit card. For the most current repair charges please refer to the service and support section on our website.

Return all merchandise to B&K Precision Corp. with pre-paid shipping. The flat-rate repair charge for Non-Warranty Service does not include return shipping. Return shipping to locations in North America is included for Warranty Service. For overnight shipments and non-North American shipping fees please contact B&K Precision Corp.

B&K Precision Corp.
22820 Savi Ranch Parkway
Yorba Linda, CA 92887
www.bkprecision.com
714-921-9095

**Include with the returned instrument your complete return shipping address, contact name, phone number and description of problem.**

# LIMITED THREE-YEAR WARRANTY

B&K Precision Corp. warrants to the original purchaser that its products and the component parts thereof, will be free from defects in workmanship and materials. for a period of **three years** from date of purchase.

B&K Precision Corp. will, without charge, repair or replace, at its option, defective product or component parts. Returned product must be accompanied by proof of the purchase date in the form of a sales receipt.

To obtain warranty coverage in the U.S.A., this product must be registered by completing a warranty registration form on our website www.bkprecision.com within fifteen (15) days of purchase.

**Exclusions: This warranty does not apply in the event of misuse or abuse of the product or as a result of unauthorized alterations or repairs. The warranty is void if the serial number is altered, defaced or removed.**

B&K Precision Corp. shall not be liable for any consequential damages, including without limitation damages resulting from loss of use. Some states do not allow limitations of incidental or consequential damages. So the above limitation or exclusion may not apply to you.

This warranty gives you specific rights and you may have other rights, which vary from state-to-state.

B&K Precision Corp.
22820 Savi Ranch Parkway
Yorba Linda, CA 92887
www.bkprecision.com
714-921-9095

22820 Savi Ranch Parkway
Yorba Linda, CA 92887
www.bkprecision.com

© 2010, 2009 B&K Precision Corp.

Printed in China
v020416