14.6 Metaloxide (ZnO) Varistors

Types	V_V max.	V_{DC} max.	V_{DC} ± 10 % (I_{DC} = 1 mA)	$\hat{I}_p$ [1, 2)] max. repetitive	$\hat{I}_p$ [1, 3)] max. non-repetitive	$\hat{W}_p$ [1, 3)] max.	$\hat{P}_{AV}$ max. $T_{amb} \leq$ 70 °C	$\hat{V}_{pmax}$ ($\hat{I}_p$ [1)] = ...) (10 A)	(100 A)	(1000 A)	W
	V	V	V	A	A	J	W	V	V	V	g
Wire terminals [4)]											
SKVA 14 A 42	42	56	68	150	4500	24,6	0,6	110	130	215	3
SKVA 14 A 60	60	85	100	150	4500	30,1	0,6	160	185	280	3
SKVA 20 B 130	140	180	220	190	6500	79,3	1,0	350	395	525	6
SKVA 14 A 150	150	200	270	150	4500	58,5	0,6	380	440	570	3
SKVA 14 A 250	250	325	420	150	4500	103	0,6	670	780	925	3
SKVA 20 B 250	250	325	420	190	6500	146,2	1,0	580	680	830	6
SKVA 20 B 275	280	364	470	190	6500	163	1,0	750	835	1025	6
SKVA 14 A 320	330	429	560	150	4500	137	0,6	800	930	1300	3
SKVA 14 A 420	420	546	710	150	4500	175	0,6	1000	1255	1600	3
SKVA 20 B 420	420	546	710	190	6500	224	1,0	1000	1255	1600	6
SKVA 20 B 460	460	598	780	190	6500	289	1,0	1240	1275	1650	6
SKVA 20 B 550	600	780	1000	190	6500	345	1,0	1590	1760	2100	6
Plastic package, 1 varistor											
SKVC 20 A 251	250	320	390 ± 15 %	190	6500	140	0,8 [5)]	600	650	800	120
SKVC 20 A 460	460	615	750 ± 15 %	190	6500	260	0,8 [5)]	1150	1270	1550	120
Plastic package, 1 varistor + 1 capacitor 0,1 µF											
SKVC 20 A 460C	460	615	750 ± 15 %	190	6500	260	0,8 [5)]	1150	1270	1550	130
Plastic package, 3 varistors											
SKVC 221	140	180	220 ± 15 %	190	6500	70	0,8 [5)]	310	340	430	145
SKVC 391	250	320	390 ± 15 %	190	6500	130	0,8 [5)]	590	630	790	145
SKVC 681	420	560	680 ± 15 %	190	6500	155	0,8 [5)]	1000	1100	1300	145
SKVC 781	460	615	750 ± 15 %	190	6500	170	0,8 [5)]	1100	1200	1500	145
SKVC 911	550	745	910 ± 15 %	190	6500	210	0,8 [5)]	1350	1450	1900	145

[1)] IEC standard current pulse waveform 8 x 20 µs
[2)] 10^4 times during lifetime
[3)] Once during lifetime
[4)] Epoxy encapsulation carries Underwriter Laboratories flammabitlity classification 94V-0
[5)] $T_{case} \leq 85$ °C. For higher values of P_{AV} see chapter B 4 last page.

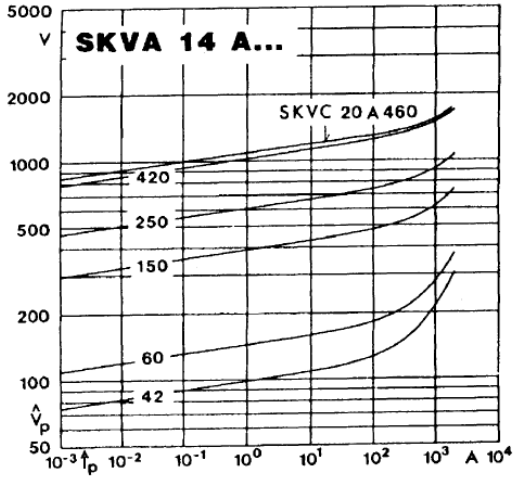

Fig. 2 a Current / voltage characteristics (pulsed)

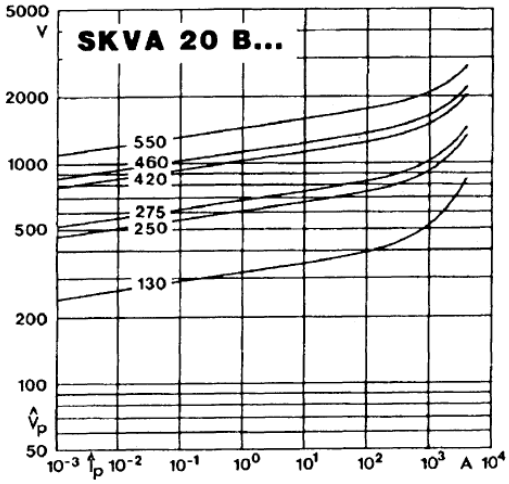

Fig. 2 b Current / voltage characteristics (pulsed)

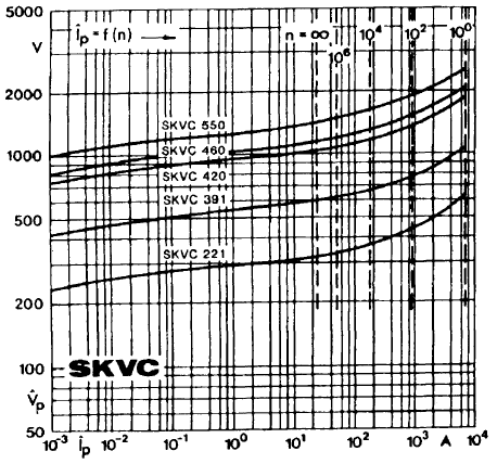

Fig. 2 c Current / voltage characteristics (pulsed)

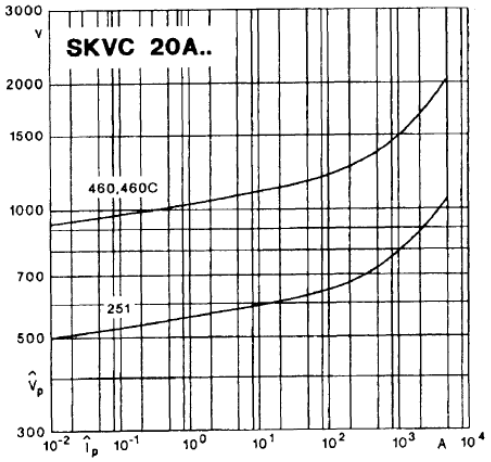

Fig. 2 d Current / voltage characteristics (pulsed)

 © by SEMIKRON

SKVA

Types	Dimensions			
	a max. mm	b max. mm	c max. mm	d mm
SKVA 14 A 42	16	19	4	2,2
SKVA 14 A 60	16	19		
SKVA 20 B 130	23	26		
SKVA 14 A 150	16	19	5	2,5
SKVA 14 A 250	17	20		3,3
SKVA 20 B 250	24	27	6	3,3
SKVA 20 B 275	24	27		3,6
SKVA 14 A 320	17	20		4,0
SKVA 14 A 420	17	20	7	4,6
SKVA 20 B 420	24	27	7	4,6
SKVA 20 B 460	24	27	7	5,0
SKVA 20 B 550	24	27	8	5,6

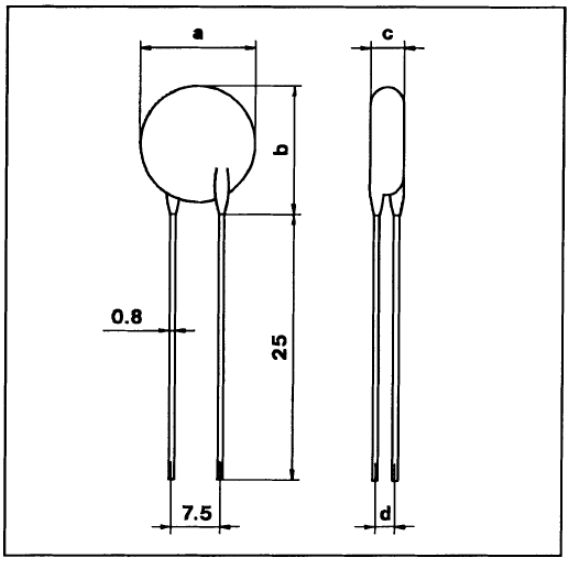

SKVC 20 A 251
SKVC 20 A 460
V_{isol} = 2500 V~

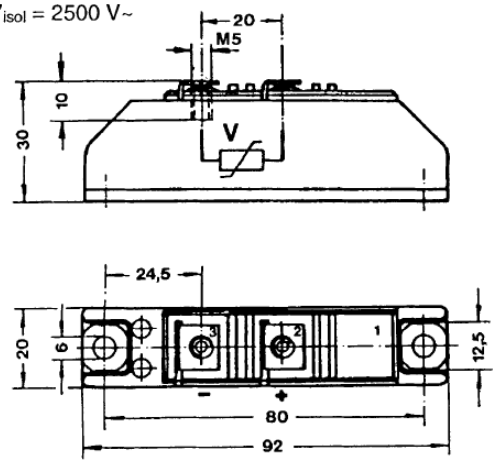

SKVC 20 A 460 C
V_{isol} = 2500 V~

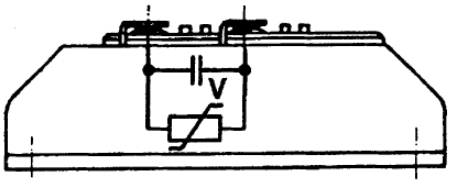

SKVC 221...911
V_{isol} = 2500 V~

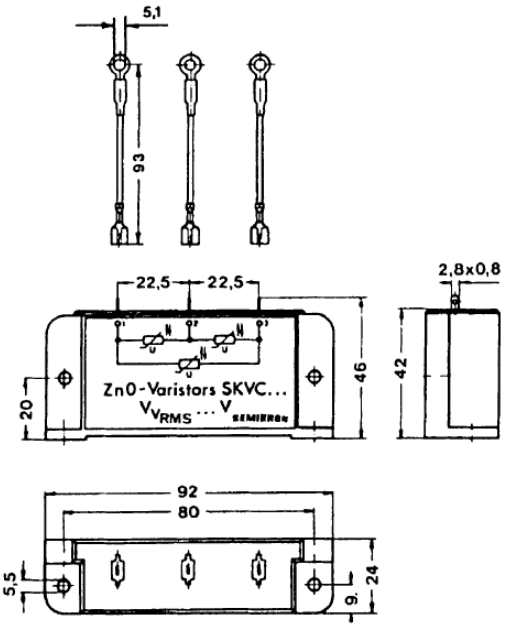

Dimensions in mm