100W Single Output with Battery Charger(UPS Function) PSC-100 series

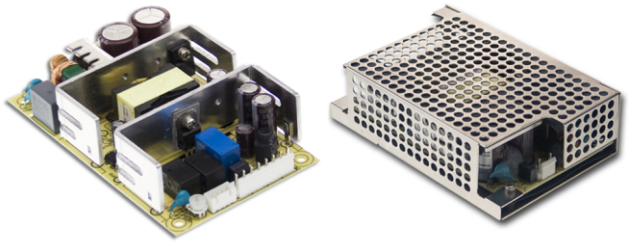

■ Features :

- Universal AC input / Full range
- 5"x3" compact size
- Models with L-Bracket and cover available (PSC-100x-C, x=A,B)
- Protections: Short circuit / Overload / Over voltage
- Battery low protection / Battery reverse polarity protection by fuse
- Relay contact signal output for AC OK and Battery Low
- Cooling by free air convection
- 100% full load burn-in test
- 2 years warranty

SPECIFICATION

PSC-100A☐ ☐=Blank,-C ; Blank=PCB only, -C=Enclosed type

MODEL		PSC-100A☐		PSC-100B☐	
OUTPUT	OUTPUT NUMBER	CH1	CH2	CH1	CH2
	DC VOLTAGE	13.8V	13.8V	27.6V	27.6V
	RATED CURRENT	4.75A	2.5A	2.4A	1.25A
	CURRENT RANGE	0 ~ 7A	--------	0 ~ 3.5A	--------
	RATED POWER	100.05W		100.74W	
	RIPPLE & NOISE (max.) Note.2	100mVp-p	--------	100mVp-p	--------
	VOLTAGE ADJ. RANGE	CH1: 12 ~ 15V		CH1: 24 ~ 29V	
	VOLTAGE TOLERANCE Note.3	±1.0%	--------	±1.0%	--------
	LINE REGULATION	±0.5%	--------	±0.5%	--------
	LOAD REGULATION	±0.5%	--------	±0.5%	--------
	SETUP, RISE TIME Note.4	2400ms, 30ms/230VAC 2400ms, 30ms/115VAC at full load			
	HOLD UP TIME (Typ.)	40ms/230VAC 16ms/115VAC at full load			
INPUT	VOLTAGE RANGE	90 ~ 264VAC 127 ~ 370VDC			
	FREQUENCY RANGE	47 ~ 63Hz			
	EFFICIENCY (Typ.)	86%		88%	
	AC CURRENT (Typ.)	2A/115VAC 1.2A/230VAC			
	INRUSH CURRENT (Typ.)	COLD START 35A/115VAC 70A/230VAC			
	LEAKAGE CURRENT	<1mA / 240VAC			
PROTECTION	OVERLOAD	105 ~ 150% rated output power			
		Protection type : Hiccup mode, recovers automatically after fault condition is removed			
	OVER VOLTAGE	CH1:14.49 ~ 18.63V		CH1:28.98 ~ 37.26V	
		Protection type : Shut down o/p voltage, re-power on to recover			
	BATTERY CUT OFF	10±0.5V		20¡1V	
ALARM FUNCTION	AC OK Note.6	Relay contact output, ON : AC OK ; OFF : AC Fail ; Max. rating : 30V / 1A			
	BATTERY LOW	Relay contact output, OFF : Battery OK ; ON : Battery Low ; Max. rating : 30V / 1A			
		Battery low voltage : < 11V		Battery low voltage : < 22V	
ENVIRONMENT	WORKING TEMP.	-20 ~ +70℃ (Refer to "Derating Curve")			
	WORKING HUMIDITY	20 ~ 90% RH non-condensing			
	STORAGE TEMP., HUMIDITY	-20 ~ +85℃, 10 ~ 95% RH			
	TEMP. COEFFICIENT	±0.03%/℃ (0~50℃) on CH1 output			
	VIBRATION	10 ~ 500Hz, 2G 10min./1cycle, 60min. each along X, Y, Z axes			
SAFETY & EMC (Note 4)	SAFETY STANDARDS	UL60950-1, TUV EN60950-1 approved			
	WITHSTAND VOLTAGE	I/P-O/P:3KVAC I/P-FG:1.5KVAC O/P-FG:0.5KVAC			
	ISOLATION RESISTANCE	I/P-O/P, I/P-FG, O/P-FG:100M Ohms / 500VDC / 25℃/ 70% RH			
	EMC EMISSION	Compliance to EN55022 (CISPR22) Class B, EN61000-3-2,-3			
	EMC IMMUNITY	Compliance to EN61000-4-2,3,4,5,6,8,11, EN55024, light industry level, criteria A			
OTHERS	MTBF	417.6K hrs min. MIL-HDBK-217F (25℃)			
	DIMENSION	PCB:127*76.2*31mm (L*W*H) ; Enclosed type:130*85*37mm (L*W*H)			
	PACKING	PCB:0.23Kg; 63pcs/15.5Kg/1.35CUFT ; Enclosed type:0.44Kg;32pcs/15Kg/0.64CUFT			

NOTE

1. All parameters NOT specially mentioned are measured at 230VAC input, rated load and 25¢ of ambient temperature.
2. Ripple & noise are measured at 20MHz of bandwidth by using a 12" twisted pair-wire terminated with a 0.1uf & 47uf parallel capacitor.
3. Tolerance : includes set up tolerance, line regulation and load regulation.
4. Length of set up time is measured at first cold start. Turning ON/OFF the power supply may lead to increase of the set up time.
5. Heat sink HS2,HS3 can not be shorted.
6. Heat sink HS2,HS3 must have safety isolation distance from system case.
7. The power supply is considered a component which will be installed into a final equipment. The final equipment must be re-confirmed that it still meets EMC directives. For guidance on how to perform these EMC tests, please refer to “EMI testing of component power supplies.” (as available on http://www.meanwell.com)
8. Please refer to suggest application (2)、(4) in page 3.

■ Mechanical Specification

Unit:mm

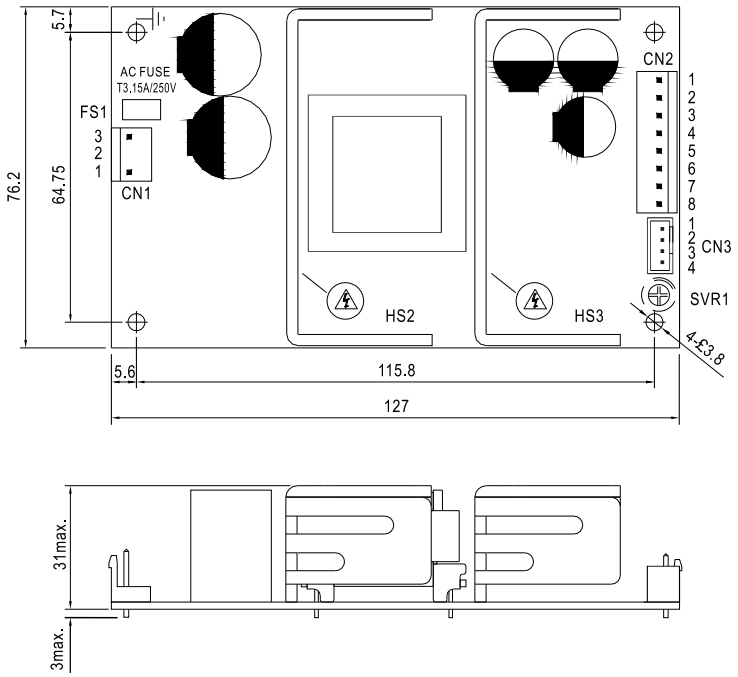

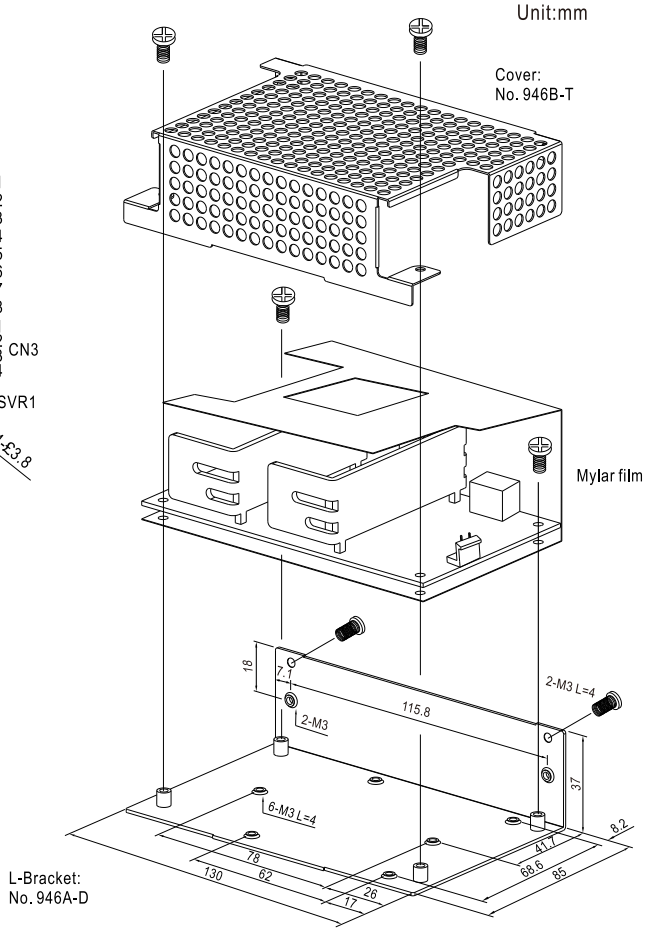

AC Input Connector (CN1) : JST B3P-VH or equivalent

Pin No.	Assignment	Mating Housing	Terminal
1	AC/N	JST VHR or equivalent	JST SVH-21T-P1.1 or equivalent
2	No Pin		
3	AC/L		

DC Output Connector (CN2) : JST B8P-VH or equivalent

Pin No.	Assignment	Mating Housing	Terminal
1,2	-V	JST VHR or equivalent	JST SVH-21T-P1.1 or equivalent
3,4	+V		
5,6	Bat+		
7,8	Bat-		

Alarm Output Connector(CN3) : JST B4B-XH or equivalent

Pin No.	Assignment	Mating Housing	Terminal
1 2	AC OK	JST XHP or equivalent	JST SXH-001T-P0.6 or equivalent
3 4	Bat. Low		

1.HS2,HS3 can not be shorted.
2.HS2,HS3 must have safety isolation distance from system case.
3.-V and Bat- can not be shorted.

■ Block Diagram

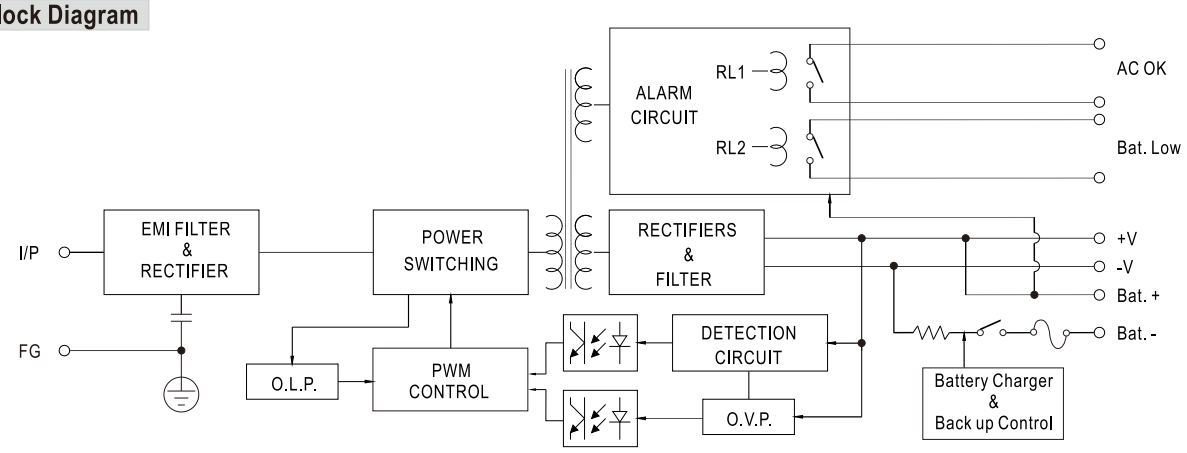

■ Output Derating

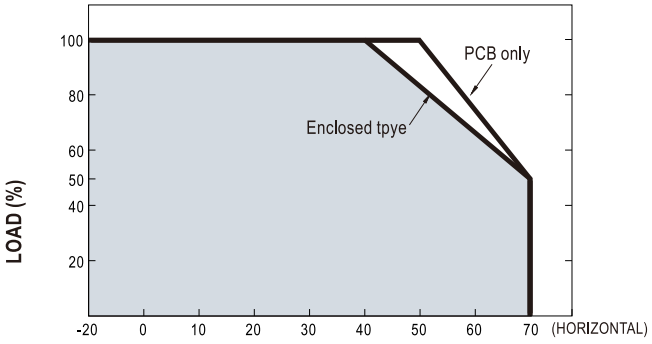

■ Output Derating VS Input Voltage

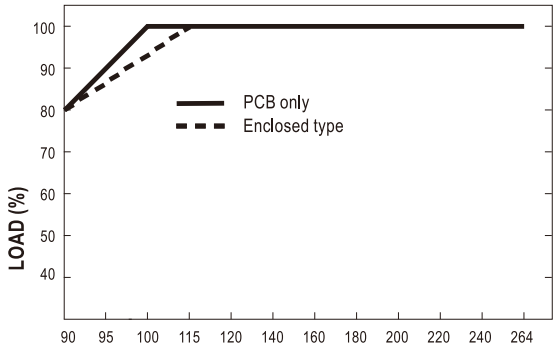

■ Suggested Application

1.Backup connection for AC interruption

(1) Please refer to the Fig1.1 for suggested connection.

The power supply charges the battery and provides energy to the load at the same time when the AC main is OK.

The battery starts to supply power to the load when the AC mains fails.

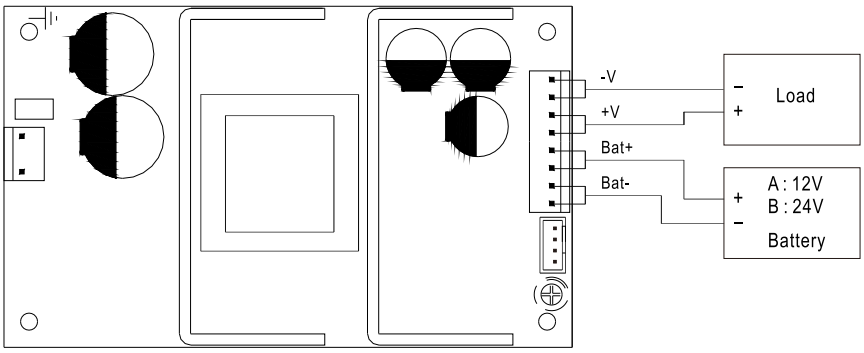

Fig 1.1 Suggested system connection

2.Alarm signal for AC OK and Battery Low

(1) Alarm signal is sent out through " AC OK " & " Battery Low " pins.(relay contact type)

(2) An external voltage source is required for this function. The maximum applied voltage is 30V and the maximum sink current is 1A.

(3) Table2.1 explains the alarm function built in the power supply

Function	Description	Output of Alarm
AC OK	The signal is "Low" when the power supply turns on	Low or short
	The signal turns to be "High" when the power supply turns OFF	High or open(External applied voltage 30V max.)
Battery Low	The signal is "Low" when the voltage of battery is under A:11V, B:22V	Low or short
	The signal is "High" when the voltage of battery is above A:11V, B:22V	High or open(External applied voltage 30V max.)

Table 2.1 Explanation of Alarm Signal

AC OK (Battery low)

CN3 Pin1(Pin3)

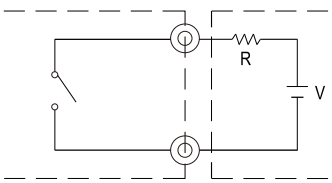

CN3 Pin2(Pin4)

External voltage source (V) and resistor (R)
(The max. Sink is 1A and 30V)

Fig 2.2 Internal circuit of AC OK (Battery Low)

(4) RL1 (AC OK)signal will go into hiccup mode when the overload protection is activating.