EN

Professionally approved products.

Datasheet

3 way Commercial Insulated Jack

RS Stock number 392-598

Dimensions(mm):

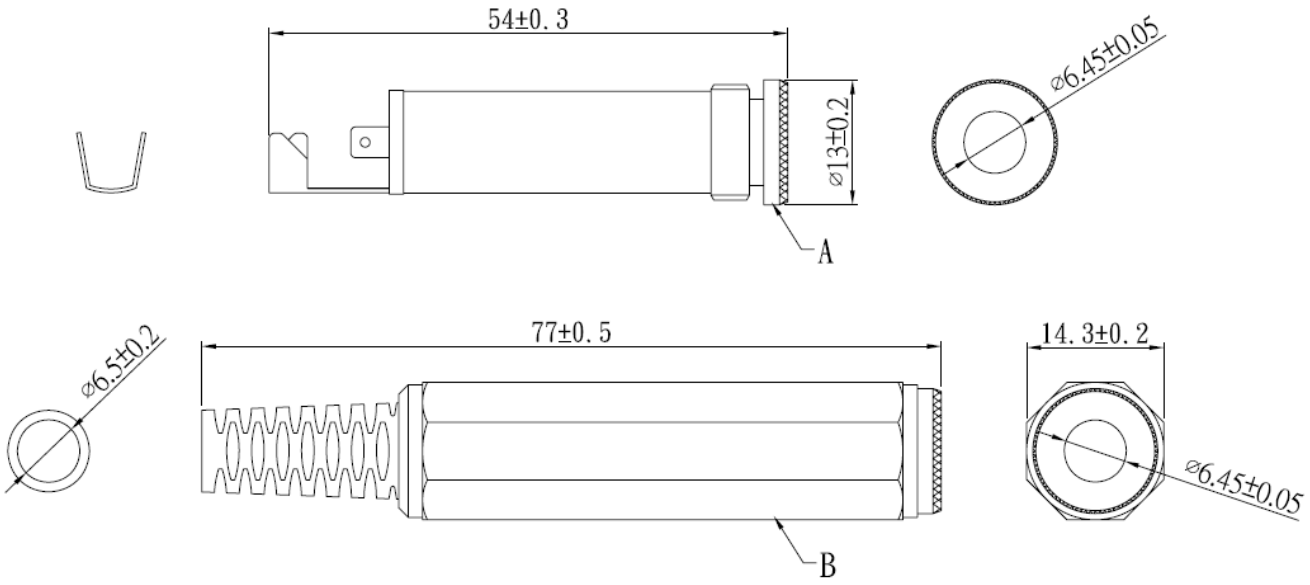

No.	Description	Unit	Material	Finish/Colour
A	6.3SJ body	1	Brass	NI
B	Plastic Cap	1	PE	B

RS, Professionally Approved Products, gives you professional quality parts across all products categories. Our range has been testified by engineers as giving comparable quality to that of the leading brands without paying a premium price.