S1, S2 CONNECTORS	TERMINAL BLOCK PLUGS	COVER SCREWS INCLUDED	TERMINAL PLUGS INCLUDED
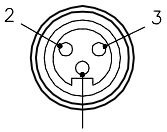	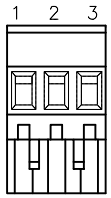	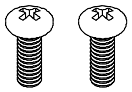 FORM 8 CONDUIT BODIES: 10–24 SCREWS 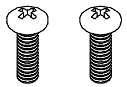 MARK 9 CONDUIT BODIES: 8–32 SCREWS	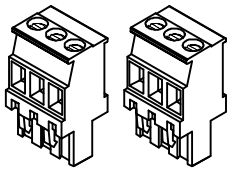

SPECIFICATIONS	
HOUSING MATERIAL/COLOR	NYLON 66 – 33% GLASS FILLED/BLACK
RECEPTACLE HOUSING MATERIAL/PLATING	STAINLESS STEEL/PASSIVATED
CONTACT CARRIERS/COLOR	TPU/BLACK
CONTACT MATERIAL/PLATING	BRASS/GOLD
OPERATING VOLTAGE	250 V
OPERATING CURRENT	9.0 A PER CONDUCTOR
PROTECTION CLASS to DIN 40050	IP 67 – ONLY WHEN ALL RECEPTACLES ARE COVERED WITH PLUGS OR CONNECTED
OPERATING TEMPERATURE	−40°C to +70°C (−40°F to +158°F)

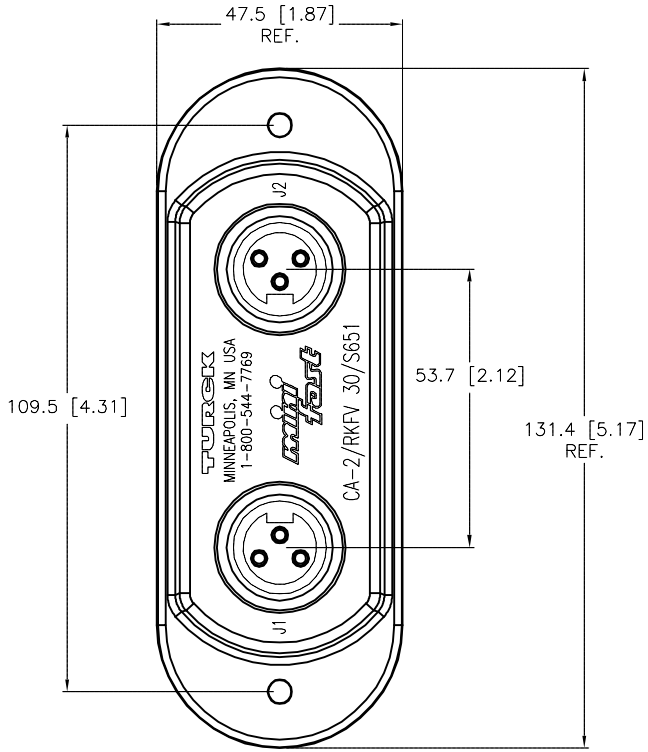

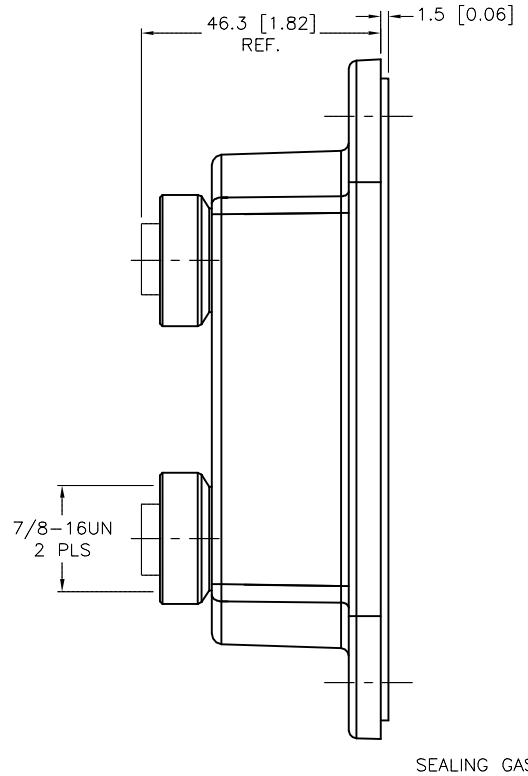

WIRING DIAGRAM

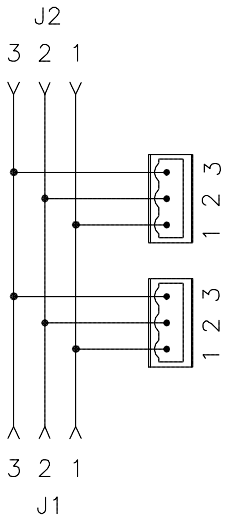

SOURCE DRAWING - FOR REFERENCE ONLY

NOTES:

1. "/S651" DESIGNATES PARALLEL WIRING.

REV	DESCRIPTION	BY	DATE	ECO NO.
D	ADD THICKER GASKET	RDS	09/12/13	42993

RELATED DOCUMENTS
1.
2.
3.
4.

3RD ANGLE PROJECTION

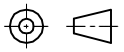

THIS DRAWING IS CONFIDENTIAL AND THE PROPERTY OF TURCK INC. USE OF THIS DOCUMENT WITHOUT WRITTEN PERMISSION IS PROHIBITED.

TURCK INC
High Technology Sensors and Automation Controls

3000 CAMPUS DRIVE
MINNEAPOLIS, MN 55441
1-800-544-7769
(763) 553-7300
(763) 553-0708 fax
turck.com

MATERIAL: SEE SPECIFICATIONS

FINISH: SEE SPECIFICATIONS

ALL DIMENSIONS DISPLAYED ON THIS DRAWING ARE FOR REFERENCE ONLY

CONTACT TURCK FOR MORE INFORMATION

DRFT: DD | DATE: 07/16/03
APVD: DD | SCALE: 1=1.5

UNIT OF MEASUREMENT
MILLIMETER [INCH]
DO NOT SCALE THIS DRAWING

DESCRIPTION: CA-2/RKFV 30/S651

IDENTIFICATION NO.: U0914-68 | REV: D

FILE: U0914-68 | SHEET 1 OF 1

Approved 09/20/2013, work order #46099 by J.S.