RG 160-28/14 NTD

DC centrifugal compact fan

single inlet

ebm-papst St. Georgen GmbH & Co. KG
Hermann-Papst-Str. 1
D-78112 St. Georgen
Phone +49 (0) 7724 81-0
Fax +49 (0) 7724 81-1309
info2@de.ebmpapst.com
www.ebmpapst.com

Nominal data

Type	RG 160-28/14 NTD	
Nominal voltage	VDC	24
Nominal voltage range	VDC	16 .. 28
Speed	min^{-1}	4200
Power input	W	64.0
Min. ambient temperature	°C	-20
Max. ambient temperature	°C	60
Air flow	m^3/h	308
Sound power level	B	7.5

ml = Max. load · me = Max. efficiency · fa = Running at free air · cs = Customer specs · cu = Customer unit
Subject to alterations

DC centrifugal compact fan

single inlet

Technical features

General description	3-phase fan drive, very smooth running Backward-curved impeller
Housing material	Scroll housing made of fibreglass-reinforced plastic, housing base made of sheet steel
Mass	1.400 kg
Dimensions	220 x 220 x 56 mm
Material of impeller	Fiberglass-reinforced plastic
Direction of air flow	Axial air intake, centrifugal air exhaust out of the outlet.
Bearing	Ball bearings
Lifetime L10 at 40 °C	55000 h
Lifetime L10 at maximum temperature	35000 h
Connection line	With single strands AWG 22, TR 64
Approval	VDE, CSA, UL

ebm-papst St. Georgen GmbH & Co. KG · Hermann-Papst-Str. 1 · D-78112 St. Georgen · Phone +49 (0) 7724 81-0 · Fax +49 (0) 7724 81-1309 · info2@de.ebmpapst.com · www.ebmpapst.com

DC centrifugal compact fan

single inlet

Product drawing

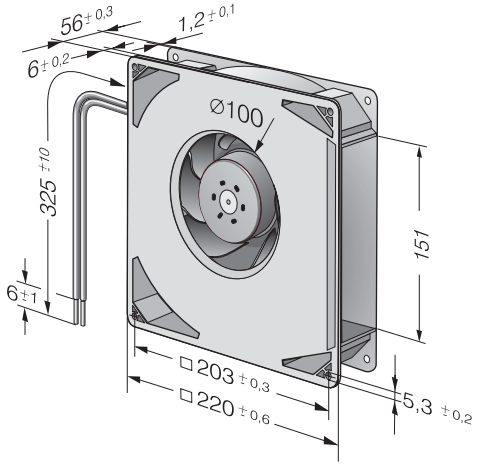

ebm-papst St. Georgen GmbH & Co. KG · Hermann-Papst-Str. 1 · D-78112 St. Georgen · Phone +49 (0) 7724 81-0 · Fax +49 (0) 7724 81-1309 · info2@de.ebmpapst.com · www.ebmpapst.com

DC centrifugal compact fan

single inlet

Charts: Air flow

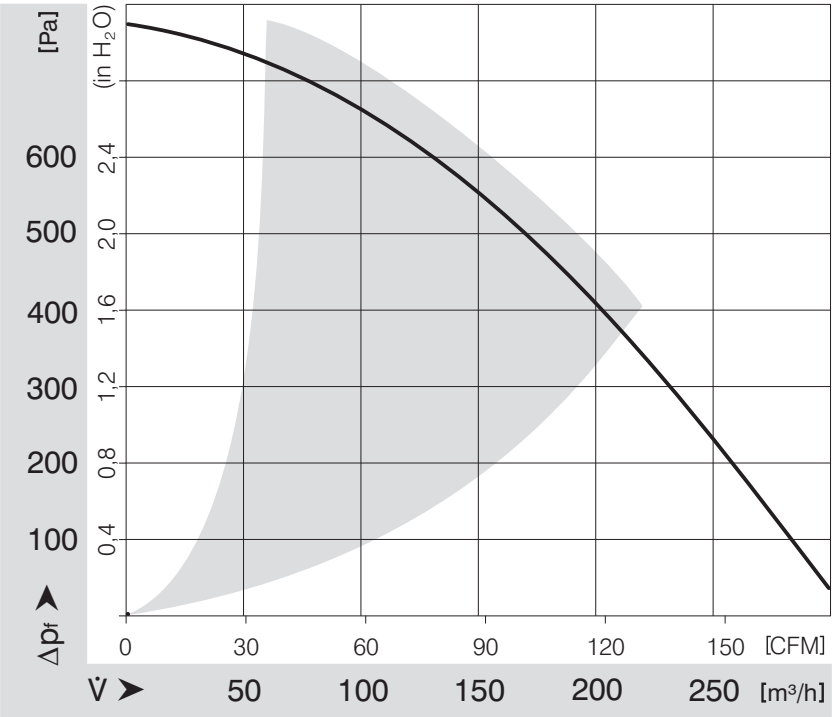

ebm-papst St. Georgen GmbH & Co. KG · Hermann-Papst-Str. 1 · D-78112 St. Georgen · Phone +49 (0) 7724 81-0 · Fax +49 (0) 7724 81-1309 · info2@de.ebmpapst.com · www.ebmpapst.com