Inline Check Valve

cim 30.1

FIPT x FIPT

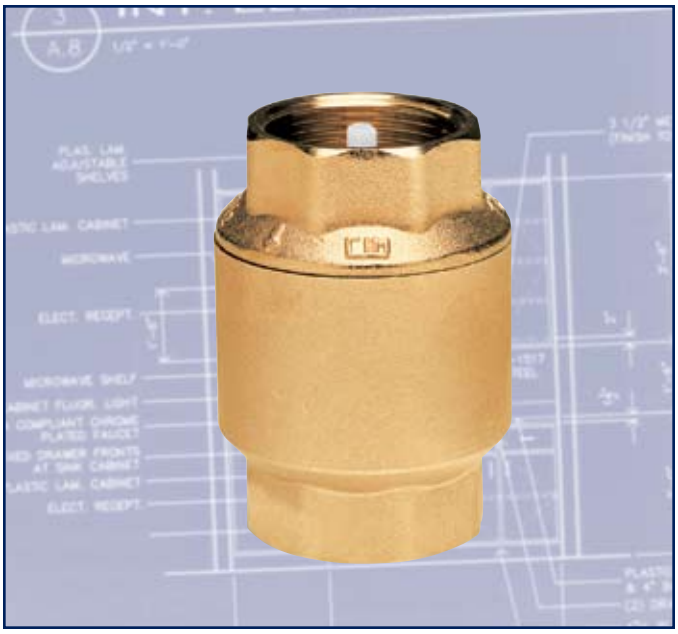

Applications:

The CIM 30.1 inline check valve is manufactured in accordance with EN ISO 9002 and is designed for vertical, horizontal or angled installation for use in domestic and commercial plumbing, sanitary systems, autoclaves, pumps and compressed air systems.

Features:

The CIM 30.1 inline check valve utilizes a compact noiseless design that provides a low pressure drop and reduced water-hammer. The CIM 30.1 is built with a double stem guide to facilitate trouble free operation and a stainless steel spring-loaded Hostaform thermoplastic free rotating stem that opens at .36 PSI. The CIM 30.1 will provide a full flow area equal to the nominal size, and can be installed vertically, horizontally or at an angle in a pipeline to accommodate flow in one direction.

Threading:

NPT threads ANSI B1.20.1.

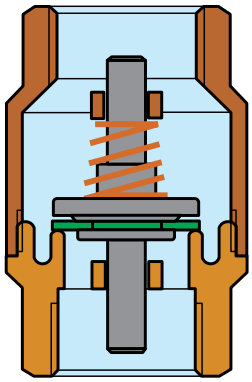

Materials:

- **Body:** Hot Forged Brass ASTM C37700
- **End Adaptor:** Hot Forged Brass ASTM C37700
- **Spring:** 18/8 ANSI 302 Stainless Steel
- **Stem:** Hostaform Thermoplastic
- **Disc:** NBR
- **Filtering "Foot":** 18/8 ANSI 302 Stainless Steel

Size	Fast Order No.	Technical ID No.
3/8"	30-03	CIM30-A03ICV
1/2"	30-04	CIM30-A04ICV
3/4"	30-06	CIM30-A06ICV
1"	30-07	CIM30-A07ICV
1-1/4"	30-08	CIM30-A08ICV
1-1/2"	30-09	CIM30-A09ICV
2"	30-10	CIM30-A10ICV
2-1/2"	30-11	CIM30-A11ICV
3"	30-12	CIM30-A12ICV
4"	30-14	CIM30-A12ICV

All Cimberio valves qualify for the American Recovery and Reinvestment Act and the Buy American Act.

Inline Check Valve

cim 30.1

FIPT x FIPT

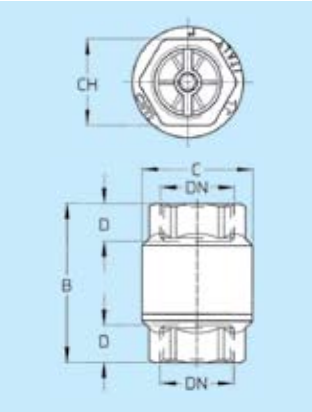

Size	3/8"	1/2"	3/4"	1"	1-1/4"	1-1/2"	2"	2-1/2"	3"	4"
B	2-3/16" 55mm	2-3/16" 55mm	2-7/16" 62mm	2-13/16" 72mm	3-1/4" 82mm	3-3/4" 96mm	4-5/16" 109mm	5-1/16" 129mm	5-9/16" 141mm	5-3/4" 146mm
C	1-3/8" 35mm	1-3/8" 35mm	1-5/8" 42mm	2" 50mm	2-3/8" 60mm	2-3/4" 70mm	3-1/4" 83mm	4-1/16" 103mm	4-13/16" 123mm	6-5/16" 160mm
D	3/8" 10mm	1/2" 12mm	1/2" 13mm	9/16" 14mm	5/8" 16mm	11/16" 18mm	13/16" 20mm	1" 25mm	1" 25mm	1" 26mm
CH	1" 25mm	1" 25mm	1-1/2" 31mm	1-9/16" 39mm	1-7/8" 48mm	2-3/16" 55mm	2-5/8" 67mm	3-7/16" 88mm	3-15/16" 100mm	4-13/16" 123mm
Pounds Grams	0.39 175	0.34 155	0.53 240	0.82 370	1.06 480	2.02 915	2.91 1320	5.52 2505	7.69 3490	11.33 5140

FLOW AND PRESSURE DROP

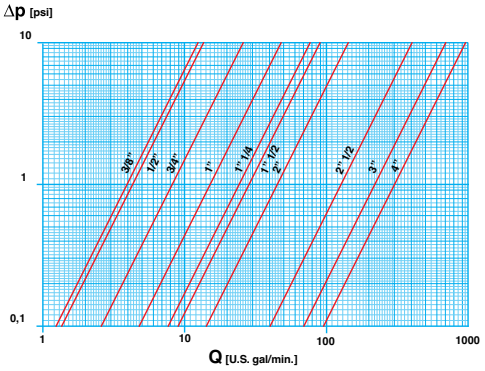

PRESSURE/TEMPERATURE RATINGS

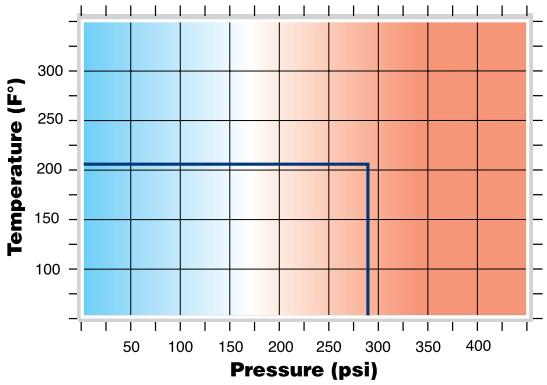

Working Pressure: 290 PSI

Max. Operating Temperature: Working Limit for Fluids 14˚ F – 212˚ F

Test Pressures: According to ISO 5208

CV

CV: Capacity in "U.S. gal/min" at pressure drop of "1 PSI"

Element: Water - Temperature: 59.9˚ F

30.1 SIZE	3/8"	1/2"	3/4"	1"	1-1/4"	1-1/2"	2"	2-1/2"	3"	4"
CV	3.93	4.3	8.1	15	24.3	28.9	44	124.9	222.1	305.4