MALE END VIEW	FEMALE END VIEW

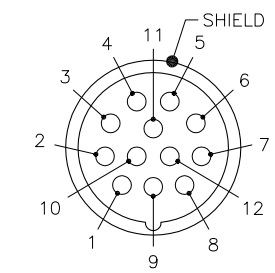

1 = BLACK
2 = WHITE
3 = GREEN
4 = N/C
5 = DRAIN
6 = N/C
7 = N/C
8 = RED
9 = N/C
10 = BLACK
11 = BLACK
12 = DRAIN

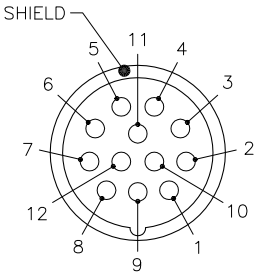

M23 connector

M23 connector

WIRING DIAGRAM

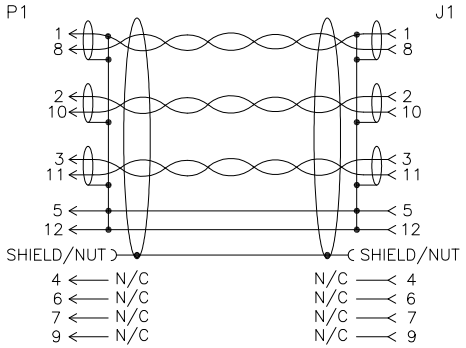

SPECIFICATIONS

CONTACT CARRIER MATERIAL/COLOR	NYLON or PBT/GRAY
MOLD MATERIAL/COLOR	TPU/BLACK (P1)
CONTACT MATERIAL/PLATING	BRASS/GOLD
HOUSING MATERIAL/PLATING	BRASS/NICKEL
RATED CURRENT [A]	6.0 A
RATED VOLTAGE [V]	300 V
OUTER JACKET MATERIAL/COLOR	PVC/GRAY
CONDUCTOR INSULATION MATERIAL	PVC
NUMBER OF CONDUCTORS [AWG]	6x20 AWG, 3x SHIELDED TWISTED PAIR
DRAIN/SHIELD	22 AWG TC COMMON DRAIN/FOIL SHIELD
BRAIDED SHIELD	36 AWG BRAIDED SHIELD
TEMPERATURE RANGE	−40°C to +80°C (−40°F to +176°F)
PROTECTION CLASS	IEC IP67

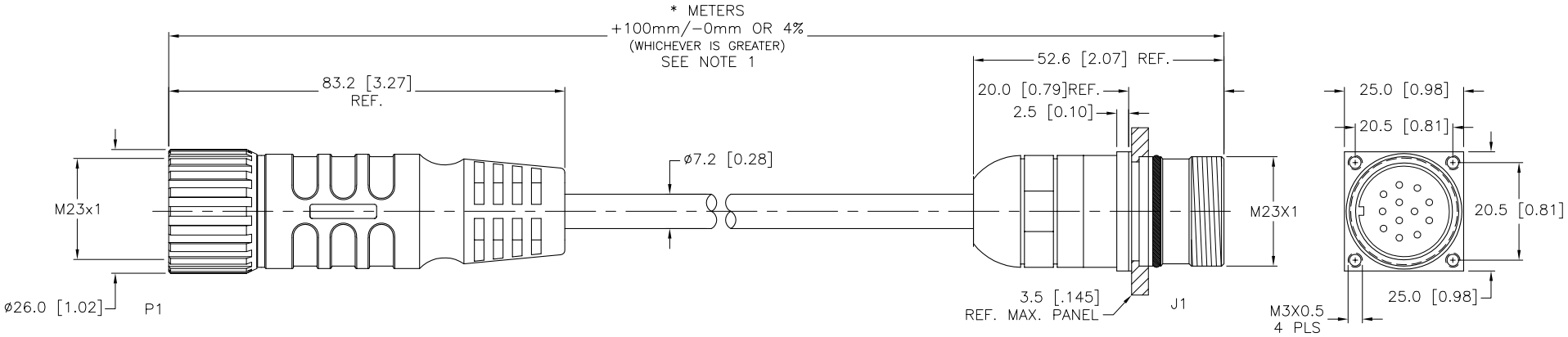

SOURCE DRAWING - FOR REFERENCE ONLY

NOTES:

1. "*" INDICATES CABLE LENGTH IN METERS. CONTACT TURCK TO ORDER SPECIFIC LENGTHS.

2. PANEL BORE 23mm ±0.1. MAXIMUM PANEL THICKNESS 3.5 [.145].

REV	DESCRIPTION	BY	DATE	ECO NO.
C	DRAWING PROCESSED AS PART OF ECO 33971	CBM	04/06/11	33971

RELATED DOCUMENTS
1.
2.
3.
4.

3RD ANGLE PROJECTION

THIS DRAWING IS PROPERTY OF TURCK INC. USE OF THIS DOCUMENT WITHOUT WRITTEN PERMISSION IS PROHIBITED.

TURCK INC
High Technology Sensors and Automation Controls

3000 CAMPUS DRIVE
MINNEAPOLIS, MN 55441
1-800-544-7769
(763) 553-7300
(763) 553-0708 fax
turck.com

MATERIAL: SEE SPECIFICATIONS

FINISH: SEE SPECIFICATIONS

ALL DIMENSIONS DISPLAYED ON THIS DRAWING ARE FOR REFERENCE ONLY

CONTACT TURCK FOR MORE INFORMATION

DRFT: JBJ | DATE: 02/06/03

DSGN | SCALE: 1=1.3

UNIT OF MEASUREMENT
MILLIMETER [INCH]
DO NOT SCALE THIS DRAWING

DESCRIPTION: CSMS CKSFDF 12-7-986-*

IDENTIFICATION NO.

REV: C

FILE: 777001881

SHEET 1 OF 1