Product data sheet
Characteristics

ZB6AGA
selector switch head Ø16 2-position stay put Ronis 200

Main

Range of product	Harmony XB6
Product or component type	Head for key selector switch
Device short name	ZB6
Bezel material	Plastic
Mounting diameter	16 mm
Sale per indivisible quantity	1
Shape of signaling unit head	Round
Type of operator	Stay put
Operator profile	Black key switch
Operator position information	2 positions
Type of keylock	Ronis 200
Key withdrawal position	Right-hand

Complementary

CAD overall width	18 mm
CAD overall height	18 mm
CAD overall depth	55 mm
Product weight	0.03 kg

Environment

Protective treatment	TC
Ambient air temperature for storage	-40...70 °C
Ambient air temperature for operation	-25...70 °C
Class of protection against electric shock	Class II conforming to IEC 61140
IP degree of protection	IP65 conforming to IEC 60529
NEMA degree of protection	NEMA 4X conforming to UL 50 NEMA 4X conforming to CSA C22-2 No 94 NEMA 4 conforming to UL 50 NEMA 4 conforming to CSA C22-2 No 94 NEMA 13 conforming to UL 50 NEMA 13 conforming to CSA C22-2 No 94
Standards	CSA C22-2 No 14 EN/IEC 60947-1 EN/IEC 60947-5-1 EN/IEC 60947-5-5 JIS C 4520 JIS C 852 UL 508
Product certifications	CCC CSA GOST UL
Vibration resistance	5 gn (f = 2...500 Hz) conforming to IEC 60068-2-6 +/- 3 mm (f = 2...500 Hz) conforming to IEC 60068-2-6
Shock resistance	50 gn for 11 ms half sine wave acceleration conforming to IEC 60068-2-27 30 gn for 18 ms half sine wave acceleration conforming to IEC 60068-2-27

The information provided in this documentation contains general descriptions and/or technical characteristics of the performance of the products contained herein.
This documentation is not intended as a substitute for and is not to be used for determining suitability or reliability of these products for specific user applications.
It is the duty of any such user or integrator to perform the appropriate and complete risk analysis, evaluation and testing of the products with respect to the relevant specific application or use thereof.
Neither Schneider Electric Industries SAS nor any of its affiliates or subsidiaries shall be responsible or liable for misuse of the information contained herein.

ZB6AGA

Circular Head for Key Switch

Dimensions

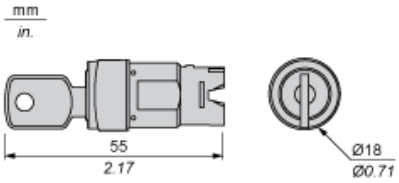

ZB6AGA

Panel Cut-out

For Square or Circular Head

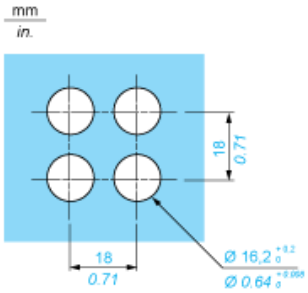

Pushbuttons, Switches and Pilot Lights for Printed Circuit Board Connection

Front Panel Cut-out (Viewed from Installer's Side)

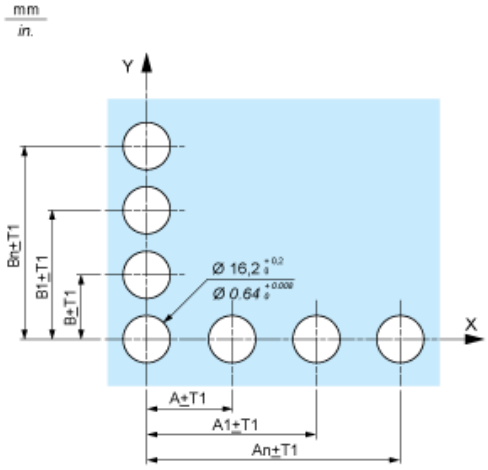

Printed Circuit Board Drillings (Viewed from Electrical Block Side)

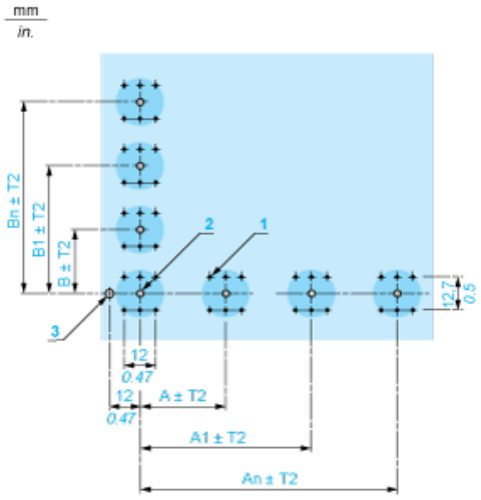

A 24 mm/0.94 in. minimum for rectangular heads, 18 mm/0.71 in. minimum for square or circular heads
B 18 mm/0.71 in. minimum
(1) 6 x Ø 1.1 mm / 6 x Ø 0.04 in. holes.
(2) 1 x Ø $2.6^{0}_{-0.2}$ mm / 1 x Ø $0.10^{0}_{-0.008}$ in. hole for locating pin, only when using socket adaptor ZB6Y010.
(3) 1 x Ø $3.2^{0}_{-0.2}$ mm / 1 x Ø $0.13^{0}_{-0.008}$ in. hole for fixing of printed circuit board onto the front panel using body bracket ZB6Y011. This hole must be drilled on the left-hand side, when heads are positioned at the normal angle. Fit a body bracket ZB6Y011 every 72 mm/2.83 in. maximum for cut-outs on 24 mm/0.94 in. centres (rectangular heads) and 54 mm/2.13 in. maximum for cut-outs on 18 mm/0.71 in. centres (square or circular heads).

General tolerances of the panel and printed circuit board: T1, T2: T1 + T2 = 0.3 mm/0.01 in. maximum.

Installation precautions:

Thickness of printed circuit board: 1.6 mm/0.06 in. minimum.

Mounting with Body Bracket

With socket adaptor ZB6Y010

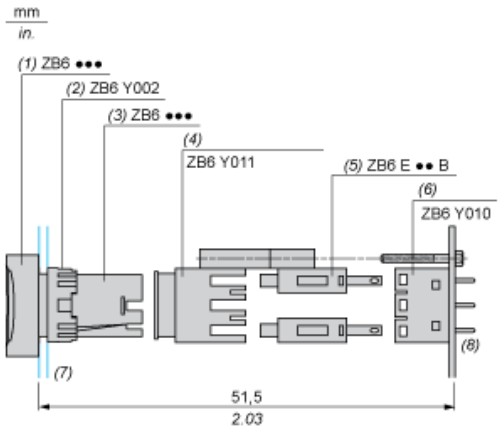

(1) Head
(2) Nut
(3) Body
(4) Body bracket
(5) Contact block
(6) Socket adaptor
(7) Panel
(8) Printed circuit

Direct mounting without socket adaptor ZB6Y010

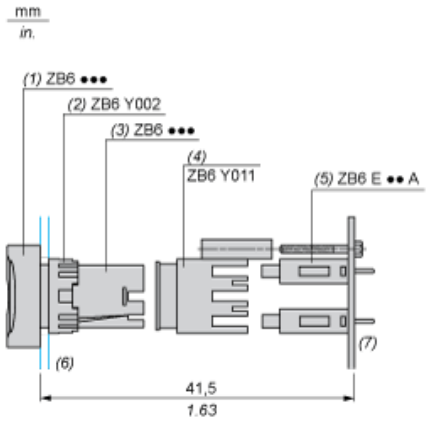

(1) Head
(2) Nut
(3) Body
(4) Body bracket
(5) Contact block
(6) Panel
(7) Printed circuit