BTL5-A11-M0140-R-S32
BTL07R9

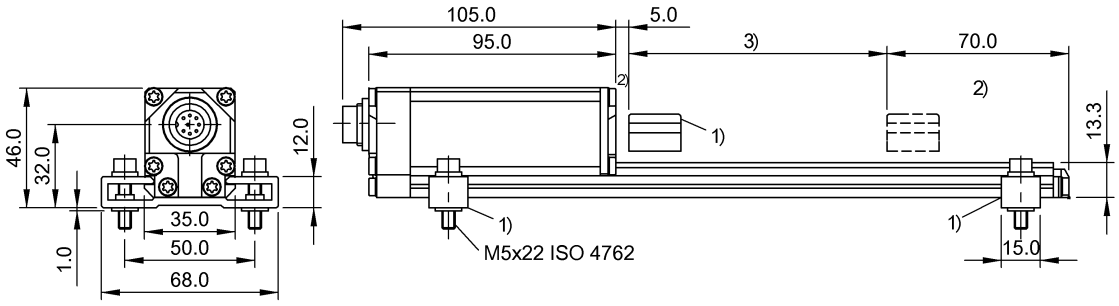

1) not included in scope of delivery 2) Non-usable area 3) Nominal length = Measuring length

Display/Operation

Error signal Ua falling	≤ -1 V
Error signal Ua rising	≥ 11 V

Electrical connection

Connection version	axial
Polarity reversal protected	yes

Electrical data

Current consumption max. at 24 V DC	150 mA
Galvanic isolation	no
Inrush current	≤ 3 A/0.5 ms
MTTF (40 °C)	89 a
Operating voltage Ub	20…28 VDC
Overvoltage protection	yes
Voltage-proof up to (GND to housing)	500 V DC

Environmental conditions

Ambient temperature	-40…85 °C
EN 55016-2-3, Radiation	Industrial areas
EN 60068-2-27, Continuous shock	100 g, 2 ms
EN 60068-2-27, Shock	100 g, 6 ms
EN 60068-2-6, Vibration	12 g, 10…2000 Hz
EN 61000-4-2, ESD	Severity Level 3
EN 61000-4-3, RFI	Severity Level 3
EN 61000-4-4, Burst	Severity Level 3
EN 61000-4-5, Surge	Severity Level 2
EN 61000-4-6, High-frequency fields	Severity Level 3
EN 61000-4-8, Magnetic fields	Severity Level 4
Protection type IEC 60529	IP67 with connector
Relative humidity	≤ 90 %, non-condensing
Storage temperature	-40…100 °C

Functional safety

Functional safety	no

General data

Approval/Conformity	CE

Material

Housing material	Aluminum
Housing material, surface protection	anodized

Mechanical data

Fastening detail	Mounting clamps
Null point	5.0 mm

Range/Distance

Non-linearity max.	±100 µm
Repeat accuracy	≤0.1 mV
Reproducibility	≤4 µm
Resolution	≤ 0.1 mV
Sampling rate, length-dependent	1 kHz, standard

For further information on MTTF/B10d, please refer to the MTTF / B10d Certificate.

Specification of the MTTF value and the B10d value do not represent any binding quality and/or life expectancy guarantees.

BTL5-A11-M0140-R-S32
BTL07R9

Connector view

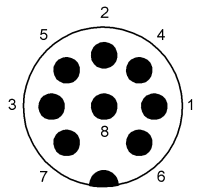

Wiring Diagram

Pin	
1	NC
2	GND output
3	10...0 V
4	NC
5	0...10 V
6	GND
7	+24 V DC
8	NC