MM 3D MODEL: TM-74754-0905

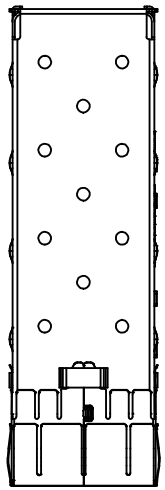

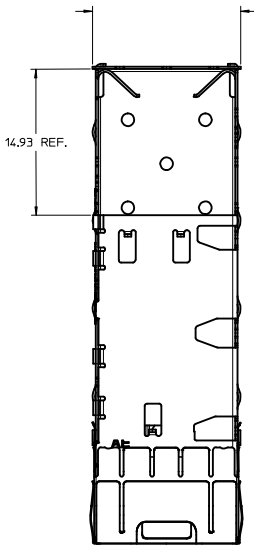

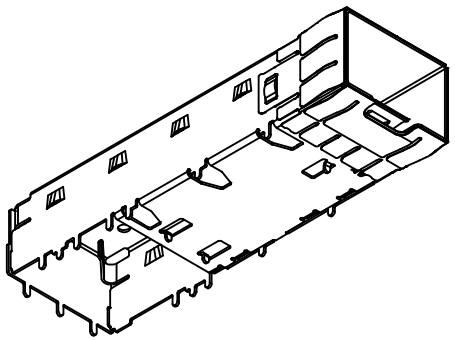

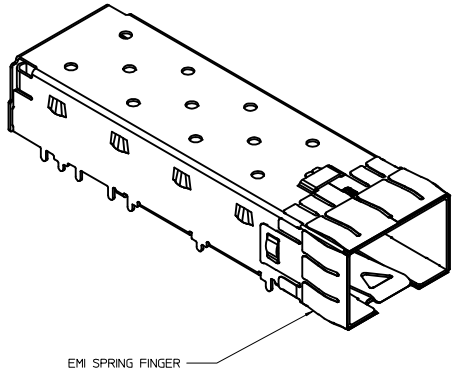

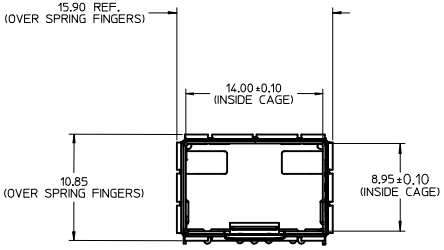

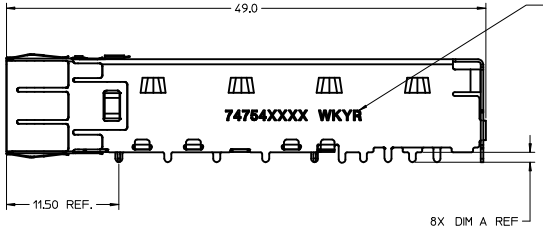

P/N AND WEEK/YEAR DATE CODE TO BE PRINTED / STAMPED ON THE SIDE OF COMPLETED CAGE ASSEMBLY AS SHOWN.

SEE TABLE BELOW FOR DATE CODE INFORMATION.

WEEK/YEAR DATE CODE TABLE	
WK	WEEK OF THE YEAR 01 THRU 52 (EXAMPLE: 01= FIRST WEEK OF YEAR 52= LAST WEEK OF YEAR
YR	15, 16, 17 ETC.. (EXAMPLE: YEAR 2015= 15)

SFP+ 1X1 CAGE			
PART NO.	PLATING	DIM. A	PACKING
747540905	UNPLATED	1.00	TRAY
747548107	UNPLATED	1.00	T&R

NOTES:

1. MATERIAL:
   CAGE: COPPER ALLOY, THICKNESS 0.25mm
   SPRING FINGER: NICKEL PLATED COPPER ALLOY, THICKNESS 0.10mm
2. OPTIONAL LIGHT PIPE ASSEMBLY AVAILABLE
3. PORTS ARE DESIGNED FOR SFP+ TRANSCEIVERS AND ARE BACKWARDS COMPATIBLE WITH SFP TRANCEIVERS
4. NO RoHS EXEMPTIONS
5. 1.57mm MINIMUM PCB THICKNESS FOR SINGLE MOUNT USED.

SEE REVISION TABLE
EC NO: CPG2016-1620 2015/09/10
DRWN:PGSHETTY 2015/10/16
CHKD:
APPR:RCHEN08
DESCRIPTION
REV
B

QUALITY SYMBOLS
=0
=0
=0

GENERAL TOLERANCES (UNLESS SPECIFIED)

	mm	INCH
4 PLACES	± ---	± ---
3 PLACES	± ---	± ---
2 PLACES	± 0.15	± ---
1 PLACE	± 0.25	± ---
0 PLACE	± ---	± ---
ANGULAR ± 1 °		

DRAFT WHERE APPLICABLE MUST REMAIN WITHIN DIMENSIONS

DIMENSION STYLE: MM ONLY
SCALE: 4:1
DESIGN UNITS: METRIC
THIRD ANGLE PROJECTION

DRAWN BY	PGSHETTY	2015/08/03
CHECKED BY	EWANG07	2015/09/08
APPROVED BY	RCHEN08	2015/09/08

MATERIAL NO. 747540905
SIZE D

TITLE: SFP+ 1X1 CAGE ASSEMBLY WITH SPRING FINGERS AND SOLDER POST LEGS

molex

DOCUMENT NO. RSD-74754-0905
SHEET NO. 1 OF 5

THIS DRAWING CONTAINS INFORMATION THAT IS PROPRIETARY TO MOLEX INCORPORATED AND SHOULD NOT BE USED WITHOUT WRITTEN PERMISSION

PCB LAYOUT FOR SINGLE SIDE MOUNT

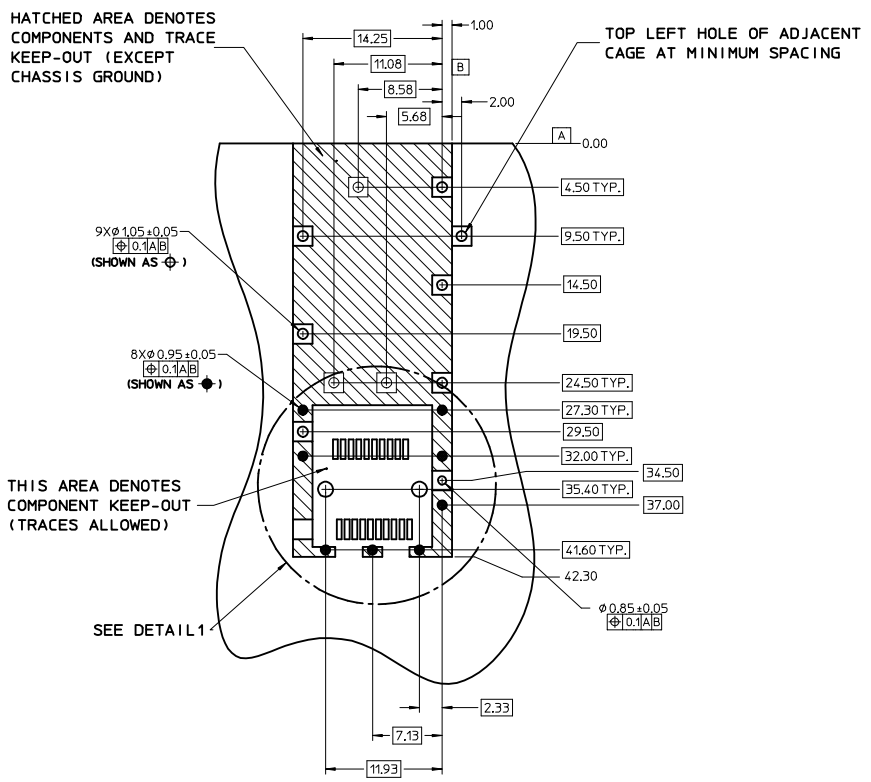

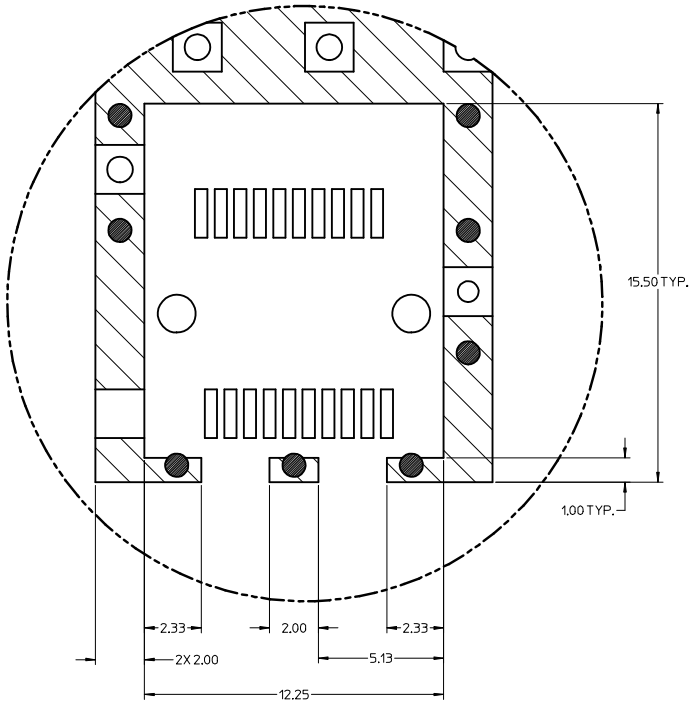

DETAIL1
SCALE 10:1

HOST CONNECTOR DETAIL

NOTES:
1. PADS AND VIAS CONNECT TO CHASSIS GROUND (RECOMMEND PADS TO BE 2.00mm SQUARE)
2. RECOMMENDED THRU HOLE PLATING INCLUDES HASL, OSP, OR IMMERSION (GOLD, SILVER, OR TIN).
3. CONNECTOR PAD LAYOUT PER SFP+ MSA WILL ACCOMMODATE MOLEX CONNECTOR SERIES 74441 OR EQUIVALENT.
4. 1.57mm MINIMUM PCB THICKNESS

SEE REVISION TABLE			
EC NO: CPG2016-1620	2015/09/10		
DRWN:PGSHETTY	2015/10/16		
CHKD:			
APPR:RCHEN08		DESCRIPTION	REV
			B

QUALITY SYMBOLS: ▽=0 (4 PLACES), ▽=0 (3 PLACES), ▽=0 (2 PLACES), ▽=0 (1 PLACE), ▽=0 (0 PLACE)

GENERAL TOLERANCES (UNLESS SPECIFIED)

	mm	INCH
4 PLACES	± ---	± ---
3 PLACES	± ---	± ---
2 PLACES	± 0.15	± ---
1 PLACE	± 0.25	± ---
0 PLACE	± ---	± ---

ANGULAR ± 1 °

DRAFT WHERE APPLICABLE MUST REMAIN WITHIN DIMENSIONS

DIMENSION STYLE	MM ONLY
SCALE	4:1
DESIGN UNITS	METRIC
	THIRD ANGLE PROJECTION
DRAWN BY	PGSHETTY 2015/08/03
CHECKED BY	EWANG07 2015/09/08
APPROVED BY	RCHEN08 2015/09/08
MATERIAL NO.	747540905
SIZE	D

TITLE: SFP+ 1X1 CAGE ASSEMBLY WITH SPRING FINGERS AND SOLDER POST LEGS

molex

DOCUMENT NO. RSD-74754-0905

SHEET NO. 2 OF 5

THIS DRAWING CONTAINS INFORMATION THAT IS PROPRIETARY TO MOLEX INCORPORATED AND SHOULD NOT BE USED WITHOUT WRITTEN PERMISSION

BEZEL AND BOARD POSITION DIMENSIONS FOR SINGLE SIDE MOUNTING (SPRING FINGER)

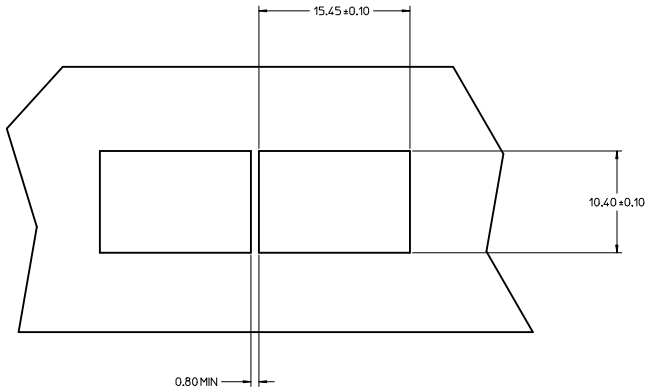

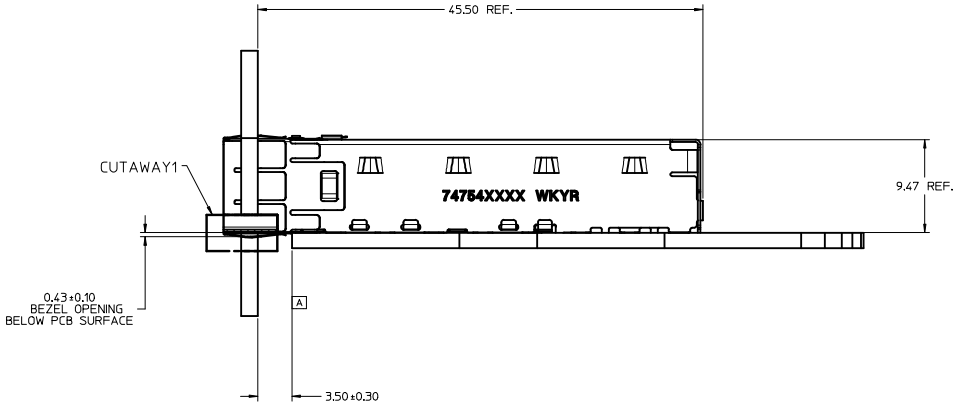

SEE REVISION TABLE			
EC NO: CPG2016-1620	DRWN:PGSHETTY	2015/09/10	
	CHKD:		
	APPR:RCHEN08	2015/10/16	DESCRIPTION
B			REV

QUALITY SYMBOLS
▽=0
▽=0
▽=0

GENERAL TOLERANCES (UNLESS SPECIFIED)

	mm	INCH
4 PLACES	± ---	± ---
3 PLACES	± ---	± ---
2 PLACES	± 0.15	± ---
1 PLACE	± 0.25	± ---
0 PLACE	± ---	± ---

ANGULAR ± 1 °

DRAFT WHERE APPLICABLE MUST REMAIN WITHIN DIMENSIONS

DIMENSION STYLE	MM ONLY
SCALE	4:1
DESIGN UNITS	METRIC
	THIRD ANGLE PROJECTION
DRAWN BY	PGSHETTY
DATE	2015/08/03
CHECKED BY	EWANG07
DATE	2015/09/08
APPROVED BY	RCHEN08
DATE	2015/09/08
MATERIAL NO.	747540905
TITLE	SFP+ 1X1 CAGE ASSEMBLY WITH SPRING FINGERS AND SOLDER POST LEGS
DOCUMENT NO.	RSD-74754-0905
SHEET NO.	3 OF 5
SIZE	D

molex

THIS DRAWING CONTAINS INFORMATION THAT IS PROPRIETARY TO MOLEX INCORPORATED AND SHOULD NOT BE USED WITHOUT WRITTEN PERMISSION

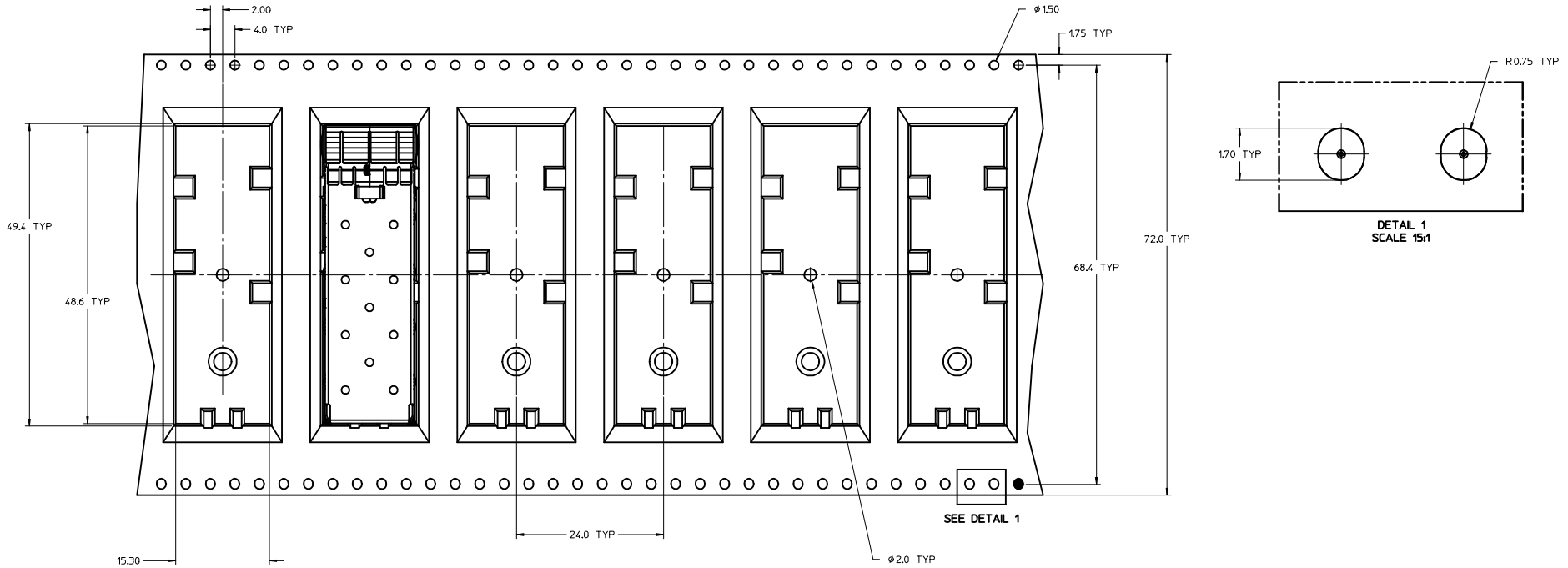

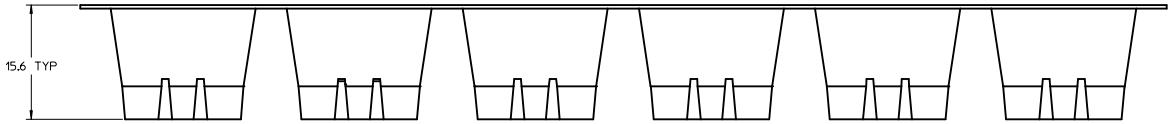

SEE REVISION TABLE			
EC NO: CPG2016-1620	2015/09/10		
DRWN:PGSHETTY	2015/10/16		
CH'KD:			
APPR:RCHEN08		DESCRIPTION	REV
			B

QUALITY SYMBOLS
▽=0
▽=0
▽=0

GENERAL TOLERANCES (UNLESS SPECIFIED)

	mm	INCH
4 PLACES	± ---	± ---
3 PLACES	± ---	± ---
2 PLACES	± 0.15	± ---
1 PLACE	± 0.25	± ---
0 PLACE	± ---	± ---

ANGULAR ± 1 °

DRAFT WHERE APPLICABLE MUST REMAIN WITHIN DIMENSIONS

DIMENSION STYLE	MM ONLY
SCALE	1:1
DESIGN UNITS	METRIC
	THIRD ANGLE PROJECTION
DRAWN BY	PGSHETTY
DATE	2015/08/03
CHECKED BY	EWANG07
DATE	2015/09/08
APPROVED BY	RCHEN08
DATE	2015/09/08
MATERIAL NO.	747540905
SIZE	D

TITLE: SFP+ 1X1 CAGE ASSEMBLY WITH SPRING FINGERS AND SOLDER POST LEGS

molex

DOCUMENT NO. RSD-74754-0905

SHEET NO. 4 OF 5

THIS DRAWING CONTAINS INFORMATION THAT IS PROPRIETARY TO MOLEX INCORPORATED AND SHOULD NOT BE USED WITHOUT WRITTEN PERMISSION

REVISION	DATE	DESCRIPTION
A	2015/08/17	INITIAL RELEASE
B	2015/09/10	SHEET 1 :C7 : ADDED T&R PACKING P/N 747548107
		:E12 : P/N AND DATA CODE HAS BEEN CHANGED FROM 747540905 TO 74754XXXX WKYR
		SHEET 4 :INSERTED TO SHOW TAPE AND REEL CONFIGURATION.

SEE REVISION TABLE
EC NO: CPG2016-1620 2015/09/10
DRWN:PGSHETTY
CH'KD:
APPR:RCHEN08 2015/10/16
DESCRIPTION
REV
B

QUALITY SYMBOLS
⌀=0
⌀=0
⌀=0

GENERAL TOLERANCES (UNLESS SPECIFIED)

	mm	INCH
4 PLACES	± ---	± ---
3 PLACES	± ---	± ---
2 PLACES	± 0.15	± ---
1 PLACE	± 0.25	± ---
0 PLACE	± ---	± ---

ANGULAR ± 1 °
DRAFT WHERE APPLICABLE MUST REMAIN WITHIN DIMENSIONS

DIMENSION STYLE: MM ONLY
SCALE: 1:1
DESIGN UNITS: METRIC
THIRD ANGLE PROJECTION

DRAWN BY: PGSHETTY DATE: 2015/08/03
CHECKED BY: EWANG07 DATE: 2015/09/08
APPROVED BY: RCHEN08 DATE: 2015/09/08
MATERIAL NO.: 747540905

TITLE: SFP+ 1X1 CAGE ASSEMBLY WITH SPRING FINGERS AND SOLDER POST LEGS

molex

DOCUMENT NO.: RSD-74754-0905
SHEET NO.: 5 OF 5
SIZE: D

THIS DRAWING CONTAINS INFORMATION THAT IS PROPRIETARY TO MOLEX INCORPORATED AND SHOULD NOT BE USED WITHOUT WRITTEN PERMISSION

MM 3D MODEL: TM-111112-3123

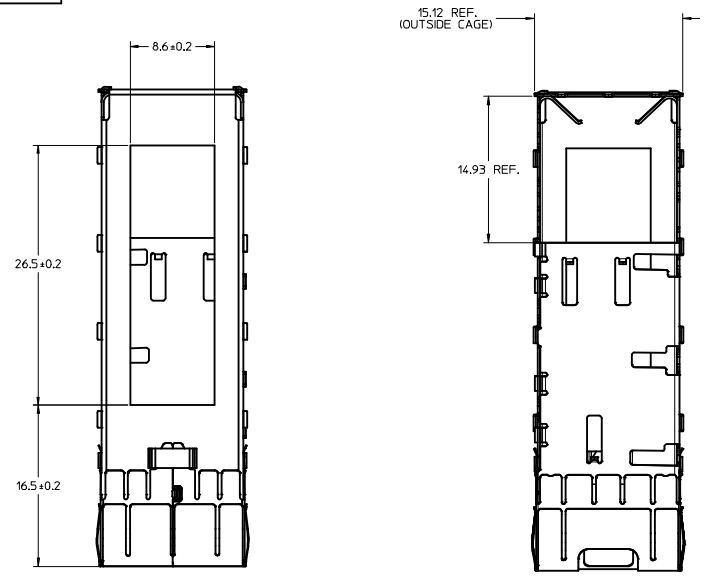

HEAT SINK AND CLIP NOT SHOWN FOR CLARITY

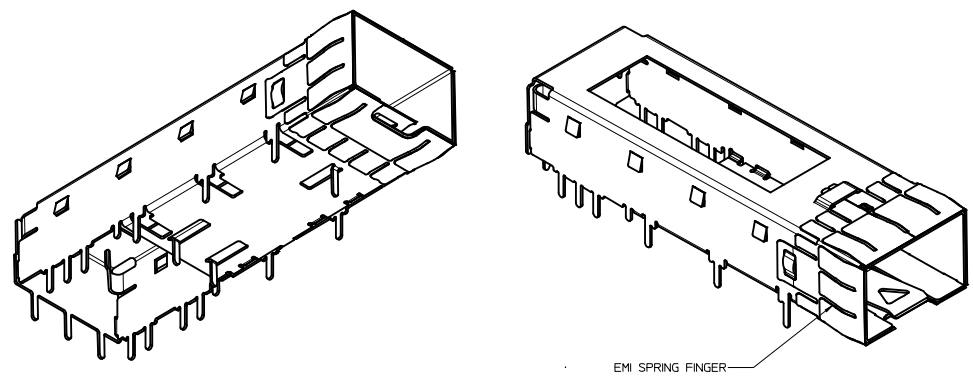

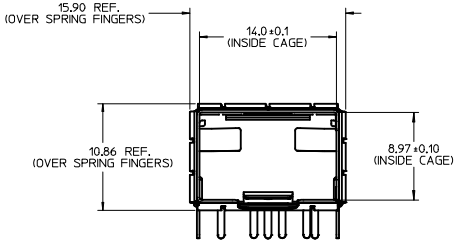

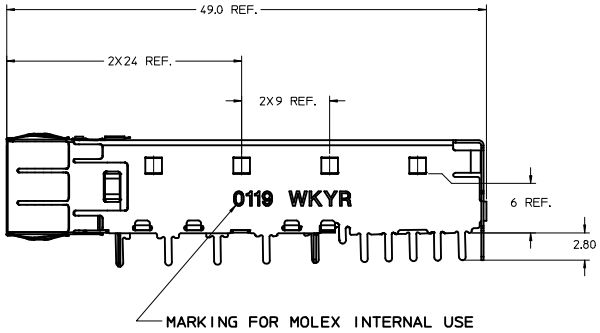

NOTES:

1. MATERIAL:
   CAGE: 0.25 mm THICK COPPER ALLOY, NICKEL PLATED.
   SPRING FINGERS: 0.1mm THICK COPPER ALLOY, NICKEL PLATED.
   HEATSINK: ALUMINIUM, NICKEL PLATED.
   HEATSINK SPRING CLIP:STAINLESS STEEL.
2. PRESS FIT LEGS 2.8mm LONG:
   1.57mm MINIMUM PCB THICKNESS FOR SINGLE SIDED USE.
3. OPTIONAL LIGHT PIPE ASSEMBLY AVAILABLE.
4. PORTS ARE DESIGNED FOR SFP+ TRANSCEIVERS AND ARE COMPATIBLE WITH SFP TRANCEIVERS.
   THE TOP SURFACE OF THE MODULE MUST BE FLAT(NO PRODUCT LABEL RECESS) AND THERMALLY CONDUCTIVE TO FUNCTION OPTIMALLY.
5. NO RoHS EXEMPTIONS.
6. CUSTOM HEATSINKS AVAILABLE UPON REQUEST.
7. CAGE ASSEMBLY, HEATSINK, AND HEATSINK SPRING CLIP SHIPPED ASSEMBLED.
8. THE MOLEX CAGE REQUIRES USING THE MOLEX HEATSINK SPRING CLIP.

REV	DESCRIPTION
A	SEE REVISION TABLE EC NO: CPG2016-1931 DRWN:PGSHETTY 2015/08/07 CH'KD:EWANG07 2015/11/05 APPR:RCHEN08 2015/11/09

QUALITY SYMBOLS: $\sqrt{E_A}$=0, $\sqrt{E_B}$=0, $\sqrt{E_D}$=0

GENERAL TOLERANCES (UNLESS SPECIFIED)

	mm	INCH
4 PLACES	± ---	± ---
3 PLACES	± ---	± ---
2 PLACES	± 0.15	± ---
1 PLACE	± 0.25	± ---
0 PLACE	± ---	± ---

ANGULAR ± 1 °

DRAFT WHERE APPLICABLE MUST REMAIN WITHIN DIMENSIONS

DIMENSION STYLE	MM ONLY
SCALE	4:1
DESIGN UNITS	METRIC
	THIRD ANGLE PROJECTION
DRAWN BY	PGSHETTY
DATE	2015/08/07
CHECKED BY	EWANG07
DATE	2015/11/05
APPROVED BY	RCHEN08
DATE	2015/11/09
MATERIAL NO.	1111123123
SIZE	D

TITLE: SFP+ 1X1 CAGE ASSEMBLY WITH SPRING FINGERS AND SOLDER POST LEGS

molex

DOCUMENT NO. SD-111112-3123

SHEET NO. 1 OF 5

THIS DRAWING CONTAINS INFORMATION THAT IS PROPRIETARY TO MOLEX INCORPORATED AND SHOULD NOT BE USED WITHOUT WRITTEN PERMISSION

tb_frame_D_P_AM_T
Rev. G 2012/01/11

P/N AND WEEK/YEAR DATE CODE TO BE PRINTED ON THE SIDE OF COMPLETED CAGE ASSEMBLY AS SHOWN.

SEE TABLE BELOW FOR DATE CODE INFORMATION.

WEEK/YEAR DATE CODE TABLE	
WK	WEEK OF THE YEAR 01 THRU 52 (EXAMPLE: 01= FIRST WEEK OF YEAR 52= LAST WEEK OF YEAR
YR	15, 16, 17 ETC., (EXAMPLE: YEAR 2015= 15)

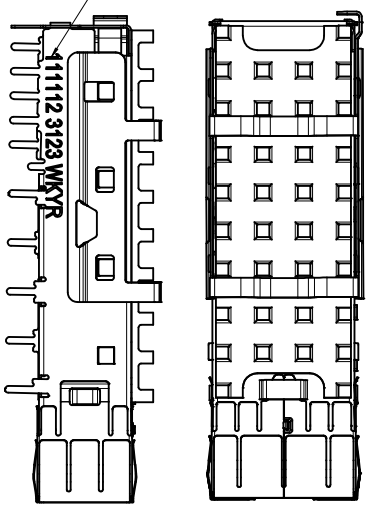

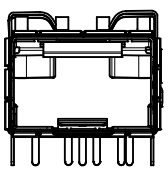

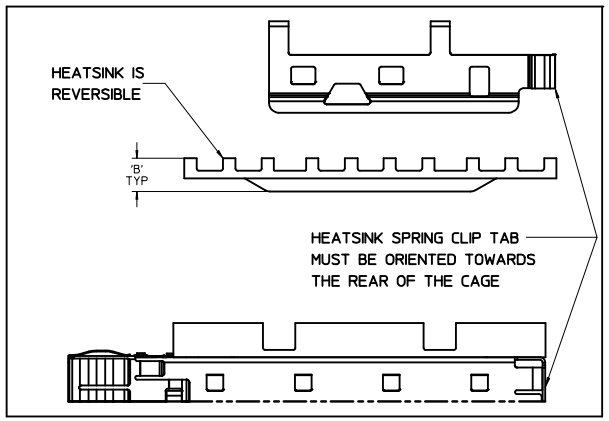

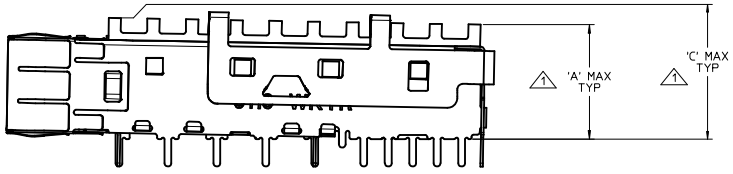

EXPLODED VIEW

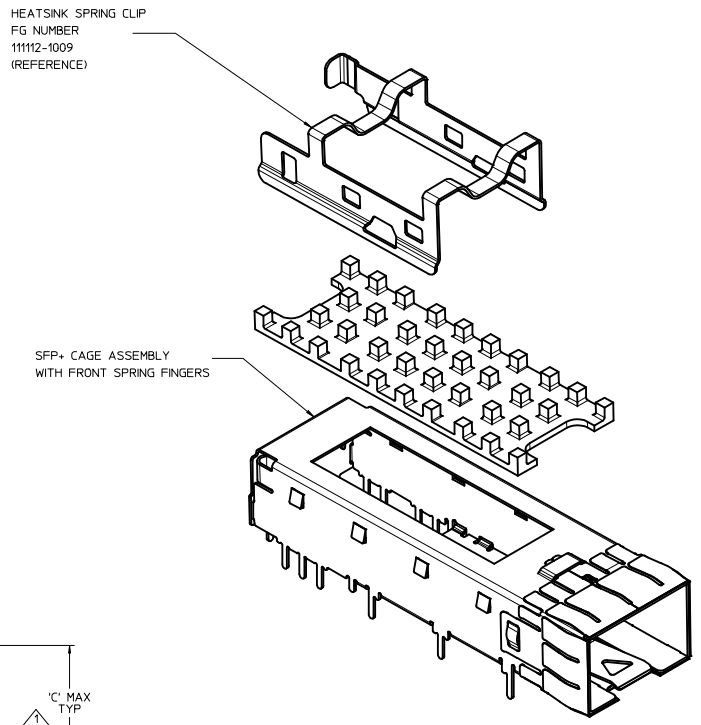

KIT MAT'L NUMBER	APPLICATION	CAGE ASSY 8	ASSEMBLED DIM 'A' 1	HEATSINK DIM 'B' (REF)	ASSEMBLED DIM 'C' 1	HEATSINK SPRING CLIP	FG HEATSINK MAT'L P/N	POLYIMIDE GASKET ATTACHED
111112-3123	PCI	1111120119	12.8	3.6	13.5	1111121009	1111122043	NO

1 HEIGHT OF HEATSINK WITH MODULE INSERTED.
DIMENSION MAY BE LESS DUE TO MODULE AND HEATSINK VARIATIONS.

ENTER DESCRIPTION
EC NO: CPG2016-1931
DRWN:PGSHETTY 2015/08/07
CH'KD:EWANG07 2015/11/05
APPR:RCHEN08 2015/11/09
REV A
DESCRIPTION

QUALITY SYMBOLS
$\overline{E_A}$ =0
$\overline{E_C}$ =0
$\overline{E_B}$ =0

GENERAL TOLERANCES (UNLESS SPECIFIED)

	mm	INCH
4 PLACES	± ---	± ---
3 PLACES	± ---	± ---
2 PLACES	± 0.15	± ---
1 PLACE	± 0.25	± ---
0 PLACE	± ---	± ---

ANGULAR ± 1 °
DRAFT WHERE APPLICABLE MUST REMAIN WITHIN DIMENSIONS

DIMENSION STYLE: MM ONLY
SCALE: 1:1
DESIGN UNITS: METRIC
THIRD ANGLE PROJECTION

DRAWN BY: PGSHETTY DATE: 2015/08/07
CHECKED BY: EWANG07 DATE: 2015/11/05
APPROVED BY: RCHEN08 DATE: 2015/11/09
MATERIAL NO.: 1111123123
SIZE: D

TITLE: SFP+ 1X1 CAGE ASSEMBLY WITH SPRING FINGERS AND SOLDER POST LEGS

molex

DOCUMENT NO.: SD-111112-3123
SHEET NO.: 2 OF 5

THIS DRAWING CONTAINS INFORMATION THAT IS PROPRIETARY TO MOLEX INCORPORATED AND SHOULD NOT BE USED WITHOUT WRITTEN PERMISSION

PCB LAYOUT FOR SINGLE SIDE MOUNT

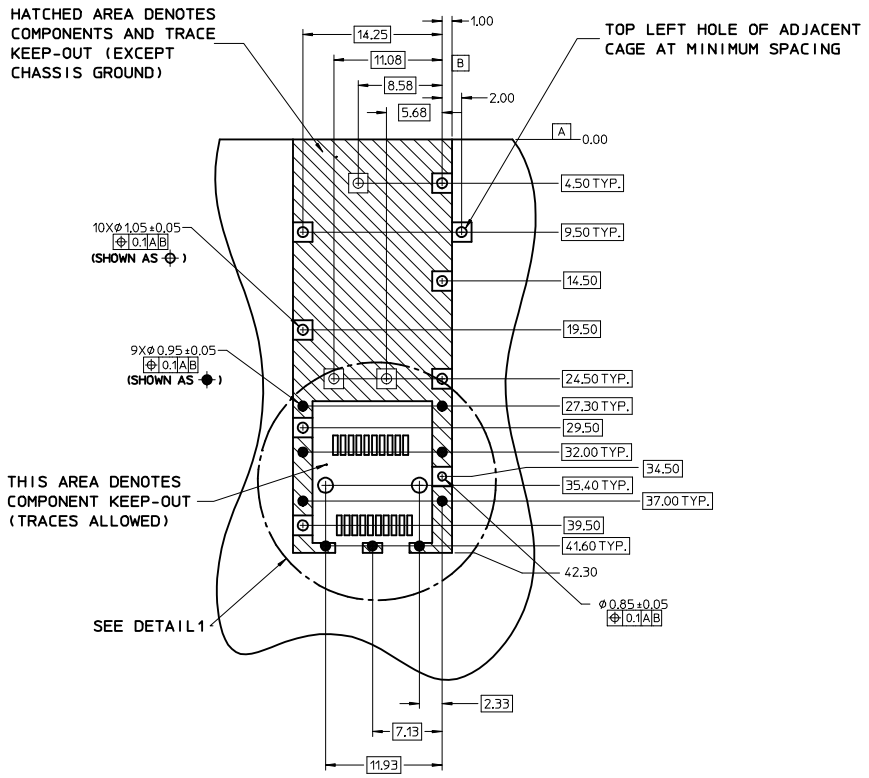

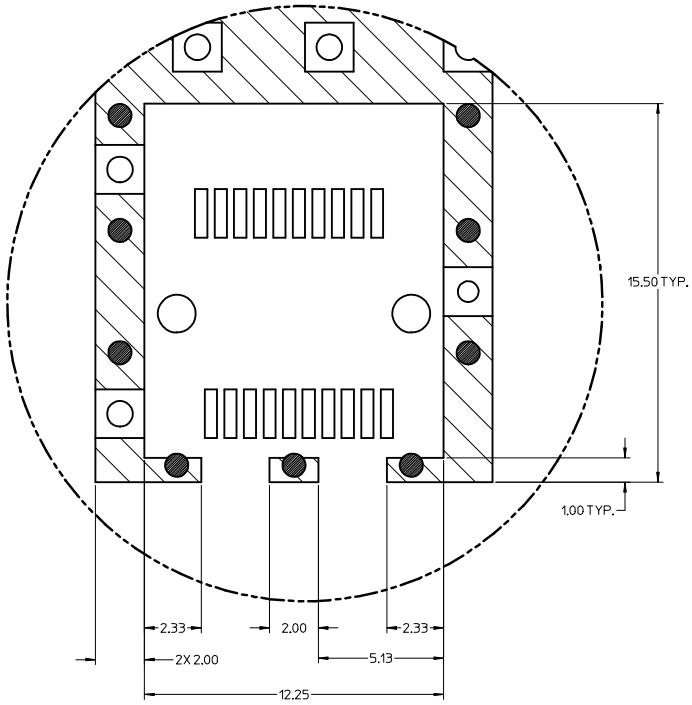

DETAIL1
SCALE 10:1

HOST CONNECTOR DETAIL

NOTES:
1. PADS AND VIAS CONNECT TO CHASSIS GROUND (RECOMMEND PADS TO BE 2.00mm SQUARE)
2. RECOMMENDED THRU HOLE PLATING INCLUDES HASL, OSP, OR IMMERSION (GOLD, SILVER, OR TIN).
3. CONNECTOR PAD LAYOUT PER SFP+ MSA WILL ACCOMMODATE MOLEX CONNECTOR SERIES 74441 OR EQUIVALENT.
4. 1.57mm MINIMUM PCB THICKNESS

SEE REVISION TABLE			
EC NO: CPG2016-1931	2015/08/07		
DRWN:PGSHETTY	2015/11/05		
CHKD:EWANG07	2015/11/09		
APPR:RCHEN08	DESCRIPTION	REV	
		A	

QUALITY SYMBOLS	GENERAL TOLERANCES (UNLESS SPECIFIED)	mm	INCH
▽=0	4 PLACES	± ---	± ---
▽=0	3 PLACES	± ---	± ---
▽=0	2 PLACES	± 0.15	± ---
▽=0	1 PLACE	± 0.25	± ---
▽=0	0 PLACE	± ---	± ---
	ANGULAR ± 1 °		
	DRAFT WHERE APPLICABLE MUST REMAIN WITHIN DIMENSIONS		

DIMENSION STYLE	MM ONLY
SCALE	4:1
DESIGN UNITS	METRIC
	THIRD ANGLE PROJECTION
DRAWN BY	PGSHETTY 2015/08/07
CHECKED BY	EWANG07 2015/11/05
APPROVED BY	RCHEN08 2015/11/09
MATERIAL NO.	1111123123
TITLE	SFP+ 1X1 CAGE ASSEMBLY WITH SPRING FINGERS AND SOLDER POST LEGS
DOCUMENT NO.	SD-111112-3123
SHEET NO.	3 OF 5
SIZE	D

THIS DRAWING CONTAINS INFORMATION THAT IS PROPRIETARY TO MOLEX INCORPORATED AND SHOULD NOT BE USED WITHOUT WRITTEN PERMISSION

BEZEL AND BOARD POSITION DIMENSIONS FOR SINGLE SIDE MOUNTING (SPRING FINGER)

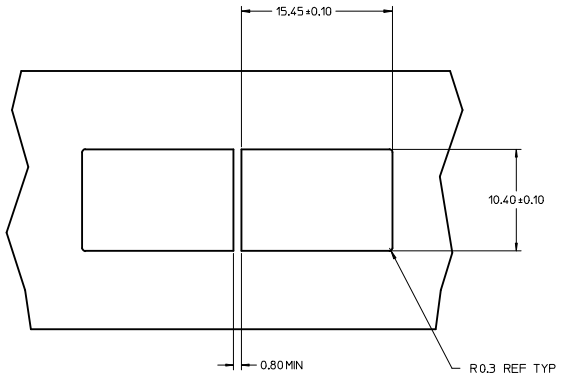

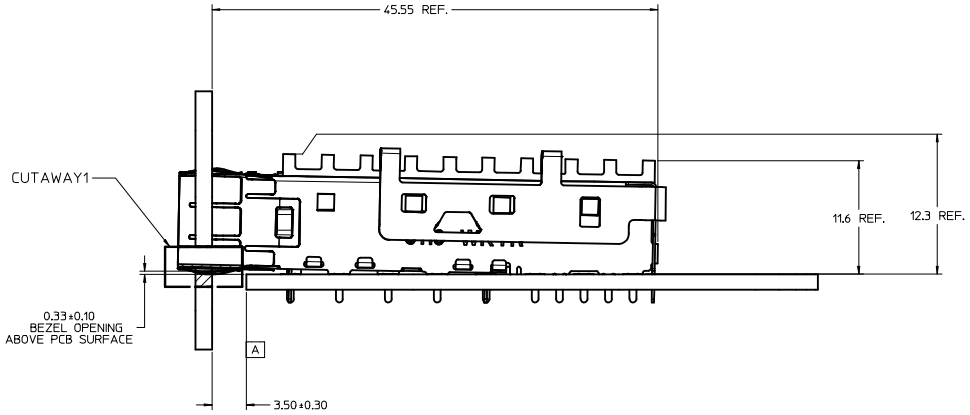

SEE REVISION TABLE			
EC NO: CPG2016-1931	2015/08/07		
DRWN:PGSHETTY	2015/11/05		
CHKD:EWANG07	2015/11/09		
APPR:RCHEN08		DESCRIPTION	
A		REV	

QUALITY SYMBOLS	GENERAL TOLERANCES (UNLESS SPECIFIED)	mm	INCH
▽=0	4 PLACES	± ---	± ---
▽=0	3 PLACES	± ---	± ---
▽=0	2 PLACES	± 0.15	± ---
▽=0	1 PLACE	± 0.25	± ---
	0 PLACE	± ---	± ---
	ANGULAR ± 1 °		
	DRAFT WHERE APPLICABLE MUST REMAIN WITHIN DIMENSIONS		

DIMENSION STYLE	MM ONLY
SCALE	4:1
DESIGN UNITS	METRIC
	THIRD ANGLE PROJECTION
DRAWN BY	PGSHETTY
DATE	2015/08/07
CHECKED BY	EWANG07
DATE	2015/11/05
APPROVED BY	RCHEN08
DATE	2015/11/09
MATERIAL NO.	1111123123
TITLE	SFP+ 1X1 CAGE ASSEMBLY WITH SPRING FINGERS AND SOLDER POST LEGS
DOCUMENT NO.	SD-111112-3123
SHEET NO.	4 OF 5
SIZE	D

molex

THIS DRAWING CONTAINS INFORMATION THAT IS PROPRIETARY TO MOLEX INCORPORATED AND SHOULD NOT BE USED WITHOUT WRITTEN PERMISSION

DATE	REVISION	DESCRIPTION
2015/11/05	A	INITIAL RELEASE

SEE REVISION TABLE
EC NO: CPG2016-1931 2015/08/07
DRWN:PGSHETTY 2015/11/05
CHKD:EWANG07 2015/11/09
APPR:RCHEN08

REV	DESCRIPTION
A	

QUALITY SYMBOLS
▽=0
▽=0
▽=0

GENERAL TOLERANCES (UNLESS SPECIFIED)

	mm	INCH
4 PLACES	± ---	± ---
3 PLACES	± ---	± ---
2 PLACES	± 0.15	± ---
1 PLACE	± 0.25	± ---
0 PLACE	± ---	± ---

ANGULAR ± 1 °

DRAFT WHERE APPLICABLE MUST REMAIN WITHIN DIMENSIONS

DIMENSION STYLE: MM ONLY
SCALE: 1:1
DESIGN UNITS: METRIC
THIRD ANGLE PROJECTION

DRAWN BY: PGSHETTY DATE: 2015/08/07
CHECKED BY: EWANG07 DATE: 2015/11/05
APPROVED BY: RCHEN08 DATE: 2015/11/09

TITLE: SFP+ 1X1 CAGE ASSEMBLY WITH SPRING FINGERS AND SOLDER POST LEGS

molex

MATERIAL NO.: 1111123123
DOCUMENT NO.: SD-111112-3123
SHEET NO.: 5 OF 5
SIZE: D

THIS DRAWING CONTAINS INFORMATION THAT IS PROPRIETARY TO MOLEX INCORPORATED AND SHOULD NOT BE USED WITHOUT WRITTEN PERMISSION

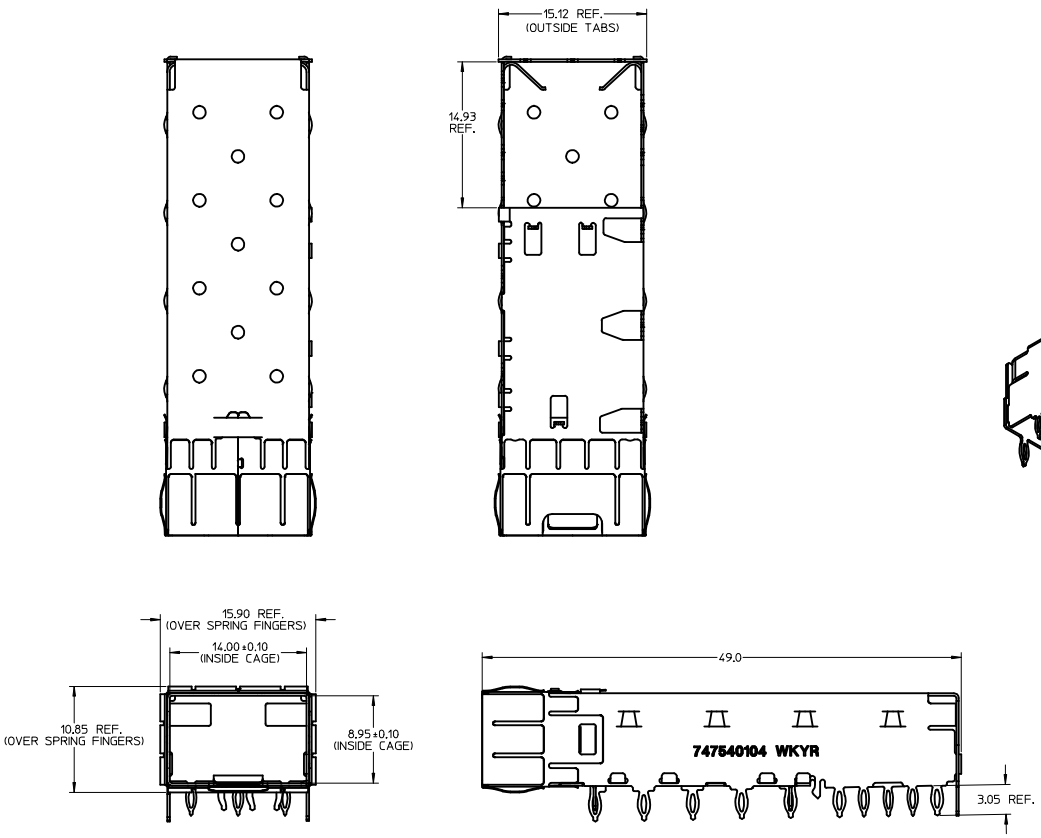

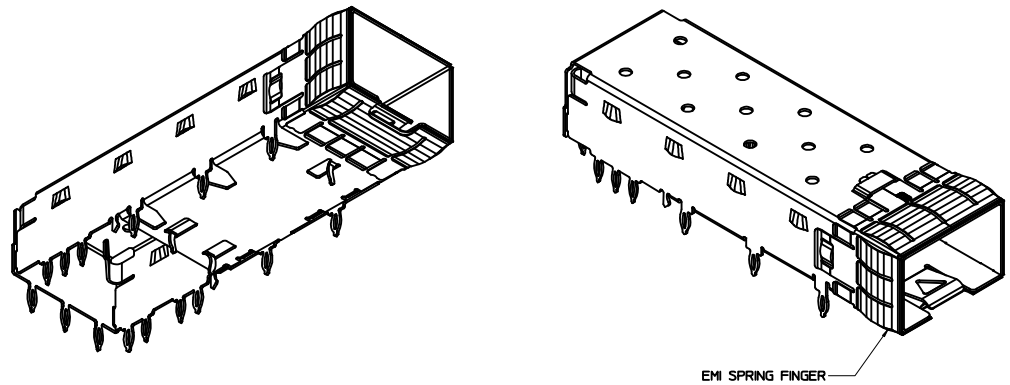

NOTES:

1. MATERIAL:
   CAGE: NICKEL PLATED COPPER ALLOY, THICKNESS 0.25mm
   SPRING FINGER: NICKEL PLATED COPPER ALLOY, THICKNESS 0.10mm
2. PRESS FIT LEGS 3.05 LONG -
   1.57 MINIMUM PCB THICKNESS FOR SINGLE SIDED USE
3. PORTS ARE DESIGNED FOR SFP+ TRANSCEIVERS AND ARE BACKWARDS COMPATIBLE WITH SFP TRANCEIVERS
4. NO RoHS EXEMPTIONS.

UPDATE ISO VIEW EC NO: CPG2014-0215 DRWN:SYANG16 2013/07/22 CHKD: APPR:RTSAI 2013/07/22	QUALITY SYMBOLS	GENERAL TOLERANCES (UNLESS SPECIFIED)	DIMENSION STYLE MM ONLY	SCALE 4:1	DESIGN UNITS METRIC	THIRD ANGLE PROJECTION	
		mm / INCH	DRAWN BY PSYTSMA DATE 2007/05/23	TITLE SFP+ 1X1 PCI CAGE WITH SPRING FINGERS PRESS FIT			
		4 PLACES ± --- ± ---	CHECKED BY BRUSSELL DATE 2007/05/23				
		3 PLACES ± --- ± ---	APPROVED BY BRUSSELL DATE 2007/05/23	molex			
		2 PLACES ± 0.15 ± ---	MATERIAL NO. 747540104	DOCUMENT NO. SD-74754-0104	SHEET NO. 1 OF 4		
		1 PLACE ± 0.25 ± ---	SIZE D	THIS DRAWING CONTAINS INFORMATION THAT IS PROPRIETARY TO MOLEX INCORPORATED AND SHOULD NOT BE USED WITHOUT WRITTEN PERMISSION			
		0 PLACE ± ±					
		ANGULAR ± 1 °					
		DRAFT WHERE APPLICABLE MUST REMAIN WITHIN DIMENSIONS					
REV C	DESCRIPTION						

tb_frame_D_P_AM_T
Rev. G 2012/01/11

PCB LAYOUT FOR SINGLE SIDE MOUNT

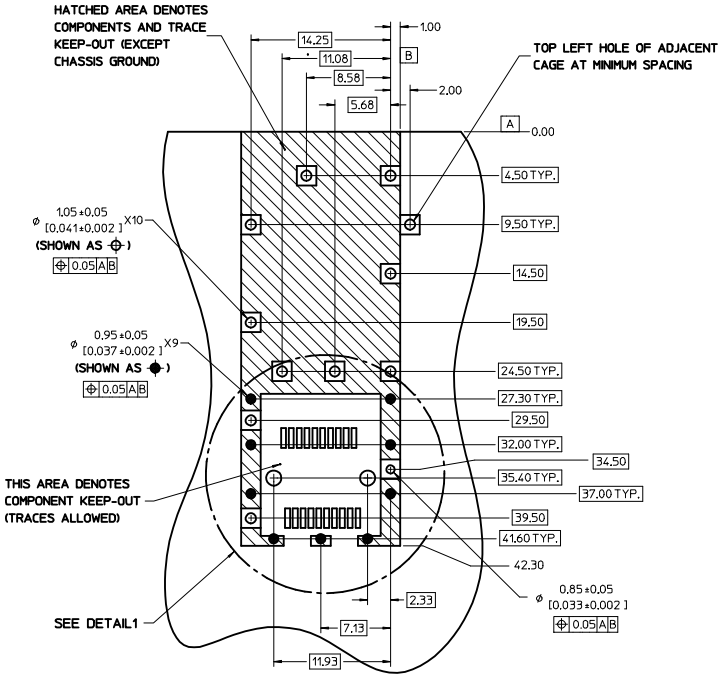

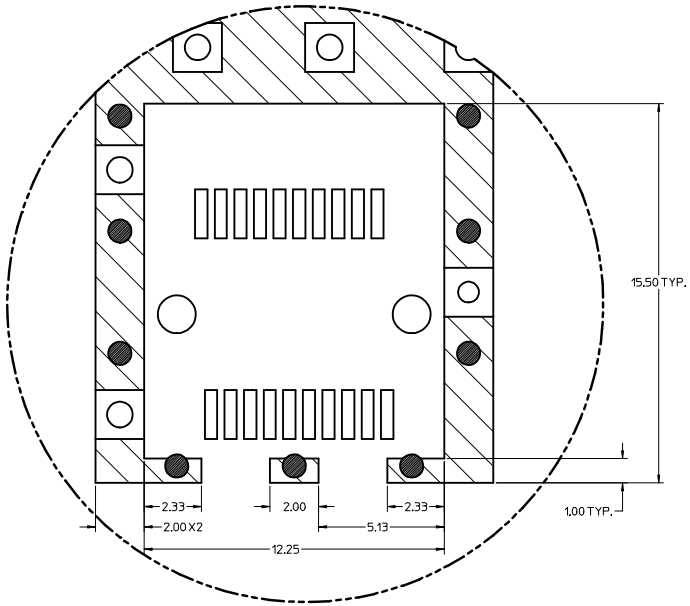

DETAIL1
SCALE 10:1

HOST CONNECTOR DETAIL

UPDATE ISO VIEW EC NO: CPG2014-0215 DRWN:SYANG16 2013/07/22 CHKD: APPR:RTSAI 2013/07/22 DESCRIPTION REV C	QUALITY SYMBOLS ▽=0 ▽=0 ▽=0	GENERAL TOLERANCES (UNLESS SPECIFIED) mm / INCH 4 PLACES ± --- / ± --- 3 PLACES ± --- / ± --- 2 PLACES ± 0.15 / ± --- 1 PLACE ± 0.25 / ± --- 0 PLACE ± / ± ANGULAR ± 1 ° DRAFT WHERE APPLICABLE MUST REMAIN WITHIN DIMENSIONS	DIMENSION STYLE MM ONLY DRAWN BY PSYTSMA DATE 2007/05/23 CHECKED BY BRUSSELL DATE 2007/05/23 APPROVED BY BRUSSELL DATE 2007/05/23 MATERIAL NO. 747540104 SIZE D	SCALE 4:1 DESIGN UNITS METRIC THIRD ANGLE PROJECTION TITLE: SFP+ 1X1 PCI CAGE WITH SPRING FINGERS PRESS FIT molex DOCUMENT NO. SD-74754-0104 SHEET NO. 2 OF 4	THIS DRAWING CONTAINS INFORMATION THAT IS PROPRIETARY TO MOLEX INCORPORATED AND SHOULD NOT BE USED WITHOUT WRITTEN PERMISSION		

BEZEL AND BOARD POSITION DIMENSIONS FOR SINGLE SIDE MOUNTING
(SPRING FINGER)

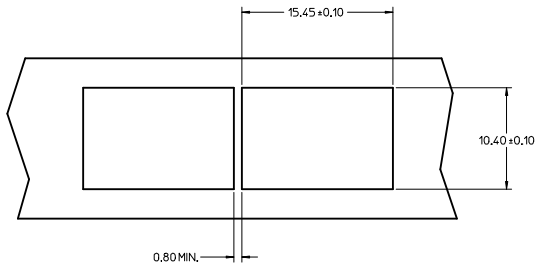

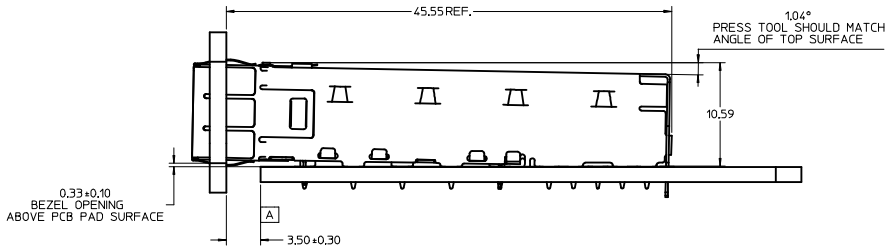

UPDATE ISO VIEW
EC NO: CPG2014-0215 2013/07/22
DRWN:SYANG16 2013/07/22
CHKD:
APPR:RTSAI
DESCRIPTION
REV

QUALITY SYMBOLS
=0
=0
=0

GENERAL TOLERANCES (UNLESS SPECIFIED)

	mm	INCH
4 PLACES	± ---	± ---
3 PLACES	± ---	± ---
2 PLACES	± 0.15	± ---
1 PLACE	± 0.25	± ---
0 PLACE	±	±

ANGULAR ± 1 °

DRAFT WHERE APPLICABLE MUST REMAIN WITHIN DIMENSIONS

DIMENSION STYLE: MM ONLY
SCALE: 4:1
DESIGN UNITS: METRIC
THIRD ANGLE PROJECTION

DRAWN BY	PSYTSMA	DATE 2007/05/23
CHECKED BY	BRUSSELL	DATE 2007/05/23
APPROVED BY	BRUSSELL	DATE 2007/05/23

TITLE: SFP+ 1X1 PCI CAGE WITH SPRING FINGERS PRESS FIT

molex

MATERIAL NO.: 747540104
DOCUMENT NO.: SD-74754-0104
SHEET NO.: 3 OF 4
SIZE: D

THIS DRAWING CONTAINS INFORMATION THAT IS PROPRIETARY TO MOLEX INCORPORATED AND SHOULD NOT BE USED WITHOUT WRITTEN PERMISSION

REV	DATE	DESCRIPTION
C	2013/07/22	REGENERATED ISO VIEW.

UPDATE ISO VIEW EC NO: CPG2014-0215 DRWN:SYANG16 2013/07/22 CH'KD: APPR:RTSAI 2013/07/22	DESCRIPTION	C	REV

QUALITY SYMBOLS
=0
=0
=0

GENERAL TOLERANCES (UNLESS SPECIFIED)	mm	INCH
4 PLACES	± ---	± ---
3 PLACES	± ---	± ---
2 PLACES	± 0.15	± ---
1 PLACE	± 0.25	± ---
0 PLACE	±	±

ANGULAR ± 1 °

DRAFT WHERE APPLICABLE MUST REMAIN WITHIN DIMENSIONS

DIMENSION STYLE: MM ONLY	SCALE	DESIGN UNITS: METRIC
DRAWN BY: PSYTSMA	DATE: 2007/05/23	
CHECKED BY: BRUSSELL	DATE: 2007/05/23	
APPROVED BY: BRUSSELL	DATE: 2007/05/23	
MATERIAL NO.: 747540104	DOCUMENT NO.: SD-74754-0104	SHEET NO.: 4 OF 4
SIZE: D		

THIRD ANGLE PROJECTION

TITLE: SFP+ 1X1 PCI CAGE WITH SPRING FINGERS PRESS FIT

molex

THIS DRAWING CONTAINS INFORMATION THAT IS PROPRIETARY TO MOLEX INCORPORATED AND SHOULD NOT BE USED WITHOUT WRITTEN PERMISSION

tb_frame_D_P_AM_T
Rev. G 2012/01/11