BCC M424-0000-2A-003-VX8434-100
BCC035W

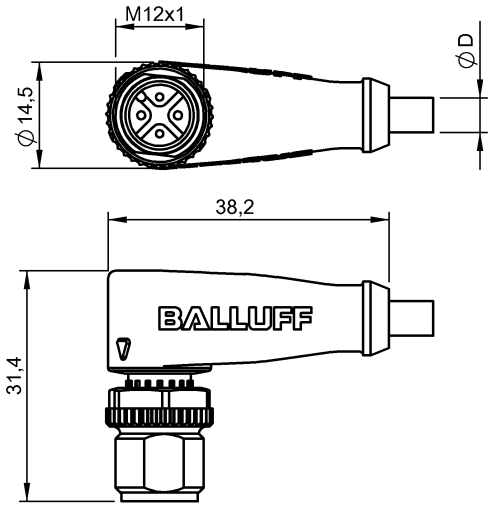

4MT5
(CYJV CABLE ASSEMBLY)

Electrical connection

Bending radius min., fixed cable	5 x D
Bending radius min., flexible cable	10 x D
Cable	PVC gray, 10.00 m, Drag chain compatible
Cable diameter D	4.80 mm ±0.15 mm
Cable, bending cycles min.	2 million
Conductor cross-section	0.34 mm²
Number of conductors	4
Number of pins	4
System	Molded

Electrical data

Horizontal travel permitted, drag chain	5 m
Rated current (40 °C)	4.0 A
Vertical travel permitted, drag chain	2 m

Environmental conditions

Cable temperatur, drag chain	-5…60 °C
Cable temperature, fixed routing	-40…105 °C
Cable temperature, flexible routing	-5…105 °C
Protection type IEC 60529	IP68

Functional safety

Cable temperature UL max., fixed routing	80 °C
Cable temperature UL max., flexible routing	80 °C

General data

Approval/Conformity	cULus LISTED

Material

Material contact carrier	PUR
Material contacts	Brass
Material cover nut	Die-cast zinc
Material grip	PUR

Mechanical data

Acceleration max., drag chain	5 m/s²
Tightening torque pigtail	0.6 Nm
Traverse speed max., drag chain	200 m/min

Remarks

Enclosure rating per IEC 60529, only in screwed state with the associated mating piece.
Cable construction acc. to UL-AWM Style 2517
Silicone-free
Flame-retarding acc. to IEC 60332-2

BCC M424-0000-2A-003-VX8434-100
BCC035W

Connector view

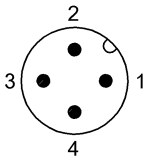

PIN 1: brown PIN 2: white PIN 3: blue PIN 4: black
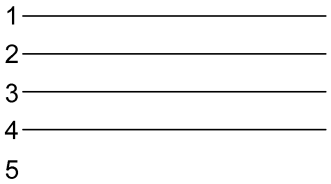
Wiring Diagram