BCS D50OO04-NPCFAC-EV02
BCS0085

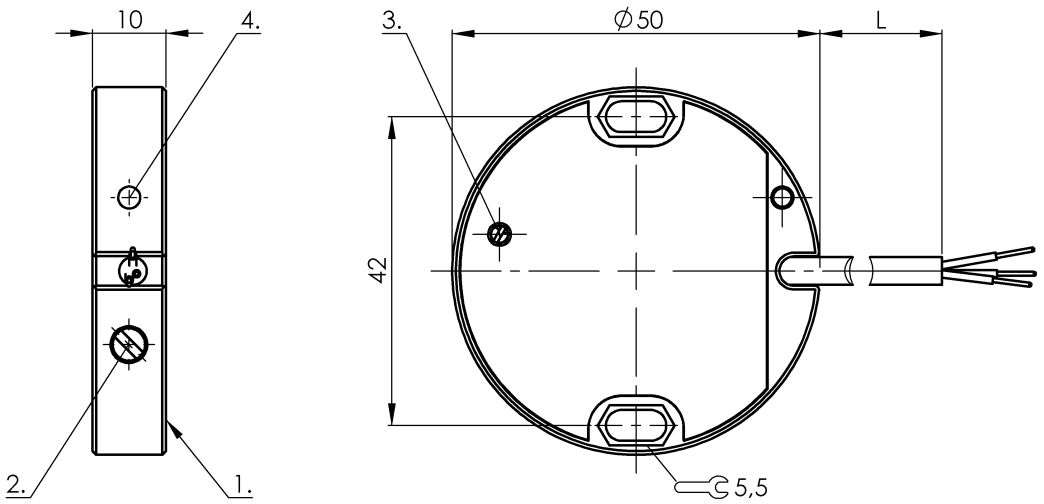

1) Sensing surface 2) Potentiometer 3) NO or NC selectable 4) LED function indicator

IND. CONT. EQ. 81U2 for use in the secondary of a class 2 source of supply

Electrical connection

Cable length	2 m
Conductor cross-section	0.25 mm²
Connection type	Cable, 2.00 m, PVC
Number of conductors	3
Polarity reversal protected	yes
Short-circuit protection	yes

Electrical data

Operating voltage Ub	10…35 VDC
Protected against miswiring	yes
Rated insulation voltage Ui	75 V DC
Rated operating current Ie DC	300 mA
Switching frequency	2 Hz
Utilization category	DC -13
Voltage drop static max.	1.8 V

Environmental conditions

Ambient temperature	-10…60 °C
Protection type IEC 60529	IP67

General data

Approval/Conformity	CE cULus
Basic standard	IEC 60947-5-2
Sensitivity	media-dependent, adjustable
Series	Level sensor

Material

Cover material	POM
Housing material	POM
Material cover	POM
Material jacket	PVC
Material sensing surface	POM

Mechanical data

Dimension	Ø 50 x 10 mm
Installation	for flush mounting
Size	D50.0

Output/Interface

Switching output	NPN Normally open/Normally closed (NO/NC)

Range/Distance

Ripple max. (% of Ue)	10 %

Remarks

Note for using in standard applications with aqueous media: The Smart Level sensors are factory adjusted for standard applications. With this setting the Smart Level sensors can be used without further adjustment for detecting aqueous media through glass or plastic walls. The factory setting can automatically mask glass or plastic walls (approx. 0.5 mm to 6 mm) and compensate for foam, moisture and dirt buildup inside and outside the container. Special applications: The Smart Level sensors can also be used with aqueous media in previously unsolvable and critical applications such as through glass or plastic walls thicker than 6 mm. Here the user can change the factory setting.

BCS D50OO04-NPCFAC-EV02
BCS0085
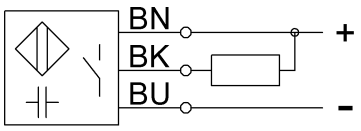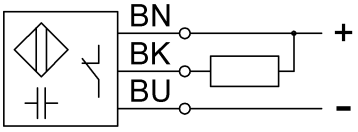
Wiring Diagram