Accessory Dimensions

Single Knuckle Joint

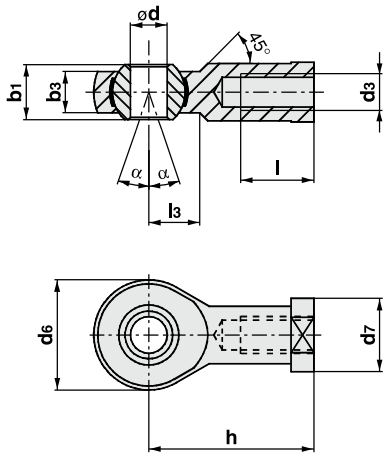

(mm)

Bore size	Model	b_1	b_3	dh_7	d_6	d_7	h	l	l_3	d_3	α^0
8	**KJ4D**	8	6.0	5	18	11	27	10	10	M4 x 0.7	7.5
10	**KJ4D**	8	6.0	5	18	11	27	10	10	M4 x 0.7	7.5
12	**KJ6D**	9	6.75	6	20	13	30	12	10	M6 x 1	6.5
16	**KJ6D**	9	6.75	6	20	13	30	12	10	M6 x 1	6.5
20	**KJ8D**	12	9	8	24	16	36	16	12	M8 x 1.25	13
25	**KJ10D**	14	10.5	10	28	19	43	20	14	M10 x 1.25	13

Double Knuckle Joint

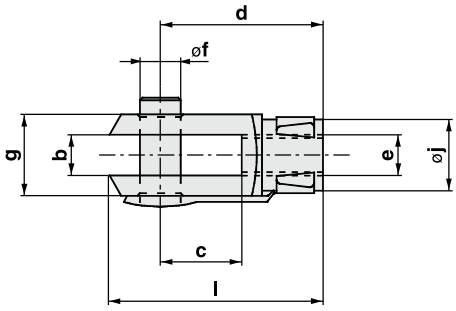

(mm)

Bore size	Model	b	c	d	f	g	j	e	l
8	**GKM4-8**	4	8	16	4	8	6	M4 x 0.7	21
10	**GKM4-8**	4	8	16	4	8	6	M4 x 0.7	21
12	**GKM6-12**	6	12	24	6	10	8	M6 x 1	31
16	**GKM6-12**	6	12	24	6	10	8	M6 x 1	31
20	**GKM8-16**	8	16	32	8	12	10	M8 x 1.25	42
25	**GKM10-20**	10	20	40	10	18	12	M10 x 1.25	52

Floating Joint: Series JA

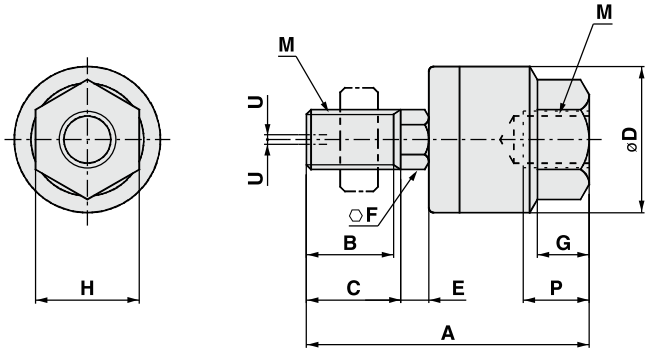

In the case of dimension without C

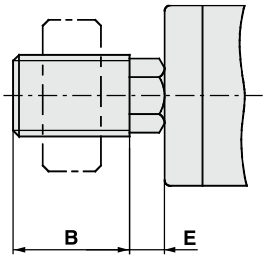

(mm)

Bore size	Model	M		A	B	C	D	E	F	G	H	Maximum screw-in depth **P**	Allowable eccentricity **U**	Max. operating tension and compression power (kN)
		Nominal thread dia.	Pitch											
8, 10	**JA10-4-070**	4	0.7	26	9	10	12	1.5	4	4	7	5.5	0.5	0.054
12, 16	**JA15-6-100**	6	1	34.5	12.5	14	16	2	6	5	10	7	0.5	0.123
20	**JA20-8-125**	8	1.25	44	17.5	—	21	4.5	7	7	13	8	0.5	1.1
25	**JA30-10-125**	10	1.25	49.5	19.5	—	24	5	8	8	17	9	0.5	2.5